Battle Ax Light

Skid Loader Mulching Head

61

Owner's Manual and Parts Book
(Originating w/Serial Number 93-1885)

Model Number: _____
Serial Number: _____
Date of Purchase: _____

203417 Rev. M

10.15.26

LOFTNESS™

LOFTNESS SPECIALIZED EQUIPMENT, INC.
LIMITED WARRANTY POLICY

The limited warranty policy begins upon delivery of the unit to the original customer.

The following Loftness products have a two (2) year limited warranty;

XLB10 Grain Bag Loader, Battle Ax L-series Skid Steer, Battle Ax S-series Skid Steer, Battle Ax H-series Skid Steer, Battle Ax Excavator 20-series, Battle Ax Excavator 30-series, Battle Ax Excavator 40-series, Battle Ax Excavator 50-series, Battle Ax Extreme, Bad Ax Skid Steer, Timber Ax Skid Steer, Stump Ax, BT20, Kwik Cut.

All other Loftness products have a one (1) year limited warranty.

If any Loftness product is used as rental or leased equipment the limited warranty period is for only 30 days from the delivery date to the original customers.

Loftness Specialized Equipment, Inc. ("LOFTNESS") warrants new LOFTNESS machinery and/or attachments at the time of delivery to the original purchaser, to be free from defects in material and workmanship when properly set up and operated in accordance with the recommendations set forth in the LOFTNESS Operator's Manual. The second year of limited warranty includes only parts, and not labor.

LOFTNESS' liability for any defect with respect to accepted goods shall be limited to repairing the goods at an authorized dealer or other LOFTNESS designated location, or replacing them as LOFTNESS shall elect. The above shall be in accordance with LOFTNESS warranty adjustment policies.

WARRANTY REQUIREMENTS

Warranty registration form must be filled out and returned to Loftness Specialized Equipment to validate all warranty claims. To request a warranty claim, a return authorization from LOFTNESS must be obtained. The failed part may then be returned in an untampered status. This warranty does not include freight or delivery charges incurred when returning machinery for servicing. Dealer mileage, service calls and pick-up/delivery charges are the customer's responsibility.

LIMITATIONS OF WARRANTY

LOFTNESS products are designed to provide years of dependable service when proper use and maintenance is adhered to. The potential for misuse in many applications exists; therefore, a limited warranty is provided as follows.

This warranty shall not apply to any machine or attachment which shall have been repaired or altered outside the LOFTNESS factory or authorized LOFTNESS dealership or in any way so as in LOFTNESS' judgment, to affect its stability or reliability, nor which has been subject to misuse, negligence or accident, nor to any machine or attachment which shall not have been operated in accordance with LOFTNESS' printed instructions or beyond the company recommended machine rated capacity. LOFTNESS may elect to have an area representative evaluate the condition of the machine before warranty is considered.

In addition, this limited warranty provides no coverage for general wear or maintenance items, misuse, environmental conditions and/or contamination for which they were not designed or not intended, including but not limited to the following items;

Use of machine beyond its rated capacity, Conveyors, Improper knife replacement, Auger wear, Missing knives, Saw blades, Striking foreign objects, Brakes and brake pads, Lack of lubrication, Tires, Failures caused by running in an "out-of-balance" condition, Hydraulic hoses damaged by being caught in "pinch points" or by moving parts, and Damage caused by excessive force from the power unit.

EXCLUSIONS OF WARRANTY

Except as otherwise expressly stated herein, LOFTNESS makes no representation or warranty of any kind, expressed or implied. **The implied warranty of merchantability and fitness for a particular purpose are disclaimed, and excluded from this limited warranty.** The remedies set forth in this warranty are the sole and exclusive remedies available to any person under this warranty. LOFTNESS shall have no liability to any person for incidental, consequential or special damages of any description, whether arising out of express or implied warranty or any other contract, negligence, or other tort or otherwise. This exclusion of consequential, incidental and special damages is independent from and shall survive any finding that the exclusive remedy failed of its essential purpose. Upon purchase, the buyer assumes all liability, all personal injury and property damage resulting from the handling, possession or use of the goods by the buyer.

No agent, employee or representative of LOFTNESS has any authority to bind LOFTNESS to any affirmation, representation or warranty concerning its machinery and/or attachments except as specifically set forth herein. (October 2025)

LOFTNESS™

To the Dealer:

In order to ensure compatibility / performance of the Loftness attachment and the customer's power unit, it is IMPERATIVE that this Pre-Delivery Inspection ("PDI") be completed using the customer's actual power unit.

PRE-DELIVERY INSPECTION

Dealer: By initialing each line I understand and promise that I have completed the following:

____ Verified the attachment is set up properly for customers power unit. (check model code with manual)

____ Greased all grease zerks till grease purges out of bearing.

____ Removed all shipping brackets.

_____Adjusted push bar out of shipping position. (if equipped) (full forward position recommended)

____ Installed head on customer's unit that will be running the attachment and set hydraulic flow per power unit manufacturer owner's manual for preferred flow.

____ Recorded the Serial Number / Make / Model of the power unit.

Power unit. S/N _____ Make _____ Model _____GPM_____

____ Recorded the Serial Number and Model of the Loftness attachment. S/N _____ Model_____

____ Verified power unit manufacturer outlined Auxiliary coupler orientation for pressure, return & case drain line.

____ Verified/recorded rotor RPM at full throttle per model & chart in Loftness owner's manual. RPM _____

____ Performed an Auxiliary system pressure stall check on the power unit only and verified that max pressure rating is achieved per power unit manufacturer specifications. Recorded pressure observed _____ PSI

PDI completed by: _____ Print

_____ Signed/Date

Contact Loftness factory if any of the tests are not within power unit or Loftness specifications.

DELIVERY

____ Showed customer all grease zerks.

____ Showed customer adjustable push bar options. (if equipped)

____ Showed customer how to properly engage hydraulics to operate attachment.

____ Reviewed owner's manual, all on-product warnings and instructions, and safe operation with customer.

____ Assisted customer with completing / submitting Warranty Registration Form to Loftness by one of the below options.
Dealer also needs to submit a copy of this completed PDI to Loftness and maintain the copy in owner's manual for unit.

Mail to:
Loftness Specialized Equipment
PO Box 337
Hector, MN 55342

Delivered to Customer by: _____Print

_____Signed/Date

Email to: registration@loftness.com

LOFTNESS COPY

To the Dealer:

In order to ensure compatibility / performance of the Loftness attachment and the customer's power unit, it is IMPERATIVE that this Pre-Delivery Inspection ("PDI") be completed using the customer's actual power unit.

PRE-DELIVERY INSPECTION

Dealer: By initialing each line I understand and promise that I have completed the following:

____ Verified the attachment is set up properly for customers power unit. (check model code with manual)

____ Greased all grease zerks till grease purges out of bearing.

____ Removed all shipping brackets.

_____Adjusted push bar out of shipping position. (if equipped) (full forward position recommended)

____ Installed head on customer's unit that will be running the attachment and set hydraulic flow per power unit manufacturer owner's manual for preferred flow.

____ Recorded the Serial Number / Make / Model of the power unit.

Power unit. S/N _____ Make _____ Model _____GPM_____

____ Recorded the Serial Number and Model of the Loftness attachment. S/N _____ Model_____

____ Verified power unit manufacturer outlined Auxiliary coupler orientation for pressure, return & case drain line.

____ Verified/recorded rotor RPM at full throttle per model & chart in Loftness owner's manual. RPM _____

____ Performed an Auxiliary system pressure stall check on the power unit only and verified that max pressure rating is achieved per power unit manufacturer specifications. Recorded pressure observed _____ PSI

PDI completed by: _____ Print

_____ Signed/Date

Contact Loftness factory if any of the tests are not within power unit or Loftness specifications.

DELIVERY

____ Showed customer all grease zerks.

____ Showed customer adjustable push bar options. (if equipped)

____ Showed customer how to properly engage hydraulics to operate attachment.

____ Reviewed owner's manual, all on-product warnings and instructions, and safe operation with customer.

____ Assisted customer with completing / submitting Warranty Registration Form to Loftness by one of the below options. Dealer also needs to submit a copy of this completed PDI to Loftness and maintain the copy in owner's manual for unit.

Mail to:
Loftness Specialized Equipment
PO Box 337
Hector, MN 55342

Delivered to Customer by: _____Print

_____Signed/Date

Email to: registration@loftness.com

CUSTOMER COPY

LOFTNESS™

Warranty

Table of Contents

Ordering Code

Ordering Code 1
Battle Ax Light - Skid Loader (Example). 1

Introduction

Owner Information 3
Warranty Policy 3
Serial Number Location 3
Owner's Manual Access 4
Battle Ax Light Features 4

Safety Instructions

Safety First 5
Owner's Responsibility 5
Mandatory Shut-Down Procedure 5
Safety Rules 6
Hydraulic Safety 7
California Proposition 65 Warning 7
Safety Decals 8
Locations 8
Defined 9
Battle Ax Light Identification 11

Set-up Instructions

Pusher Bar Assembly 13
Removing the Shipping Bar 13
Assembly 13
Repositioning the Pusher Bar 14
Remove Shipping Stands 15
Installing the Battle Ax Light to the Loader. 16
Hydraulic Connections 16
Checking Rotor Rotation. 17
Checking Rotor Speed 17
Adjusting Rotor RPM 18
Cutter Bar Adjustment 19

Operating Instructions

Getting Started 21
Operation 21
Clearing Jams 22
Log Moving 22
Detaching Battle Ax Light 22

Table of Contents

Maintenance

General Maintenance 23
Maintenance Schedule 23
Lubrication 23
Grease Points Location 23
Overhung Load Adapter 24
Removing Belt Cover 25
Removing Left End Bearing Cover 25
Removing Motor Cover 26
Removing Hose Cover 26
Skid Removal/Replacement 27
Belt Adjustment 27
Tooth Removal and Installation 28
Tooth Sharpening 28
Storage 29
End of Season 29
Beginning of the Season 29
Troubleshooting 30

Parts Identification

Covers; Jack Stand 32
Rotor, Skid Shoes 34
Cutter Bar, Deflector Chains 35
Pusher Bar 36
Motor Mount 38
Gauge, Pressure 39
Lubrication 40
Belt and Sheave Assembly, 33 Top 33 Bottom “H” (208556) 41
Rotor Assembly with Shankless Tooth (203252) 42
Rotor with Shankless Tooth (203251) 43
Rotor Assembly with Planer Teeth (203532) 44
Rotor with Planer Teeth (203531) 45
Rotor Assembly with Double Carbide Teeth (209553) 46
Rotor with Double Carbide Teeth (209552) 47
Motor Assembly (218375) 48
Overhung Load Adapter (205079) 50
Right Hand Hose Kit (208093) 51
Machine Decals and Signs 52

Appendix

Specifications 53
Dimensions 54
Torque Specifications 55
Inches Hardware and Lock Nuts 55
Metric Hardware and Lock Nuts 56

Ordering Code

Battle Ax Light - Skid Loader (Example)

The ordering code will consist of two numbers (machine size), three letters (machine type), one letter (cutter type), two numbers (motor system), one letter (sheaves and belt combination), and one letter (options). An example for a Battle Ax Light - Skid Loader of this type would be as shown below.

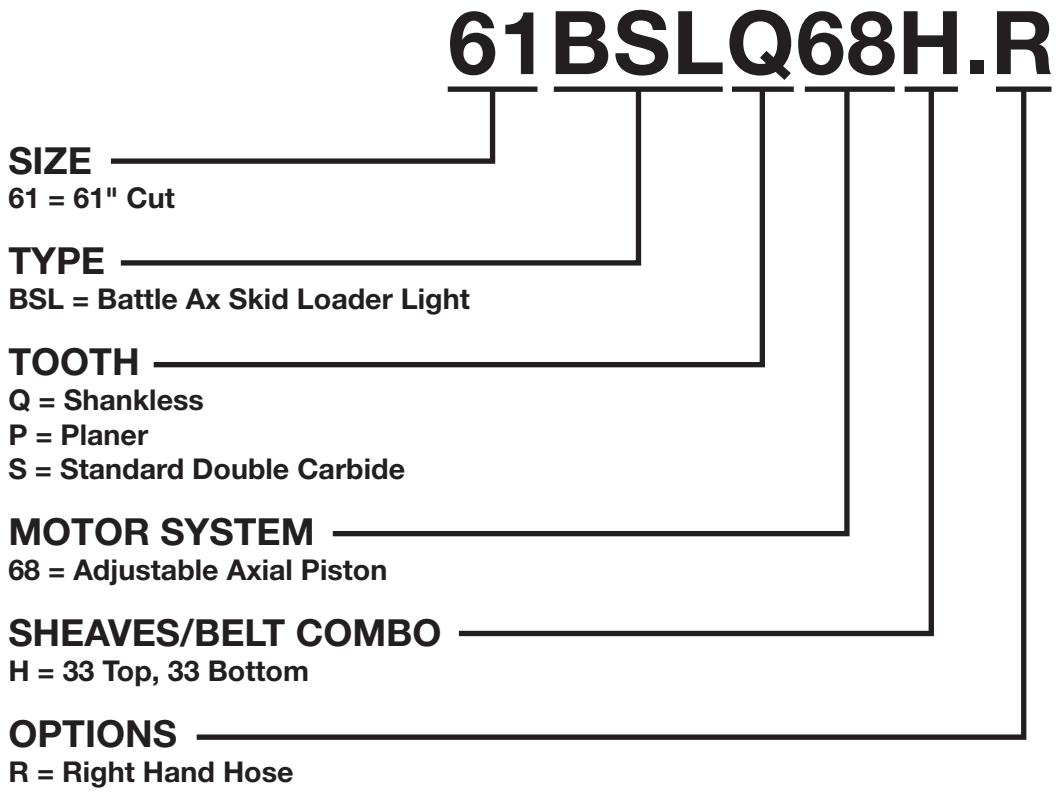

Owner Information

Thank you for your decision to purchase a Battle Ax Light skid loader-mounted shredder from Loftness. To ensure maximum performance of your machine, it is mandatory that you thoroughly study the owner's manual and follow its recommendations. Proper operation and maintenance are essential to prevent injury or damage and to maximize machine life.

The Loftness Battle Ax Light is an effective, reliable machine used for maintaining grass, weeds, brush, and trees. It efficiently cuts and mulches material up to 6" in diameter. It can intermittently cut larger-diameter material. Lifting or tilting the Battle Ax Light increases the risk of flying debris. Because of the high speed of the teeth, their service life will be reduced if the machine is operated in rocky terrain or in areas where many obstacles are present. Areas to be mowed should be free of debris such as rocks, bottles, etc. The teeth cut and pulverize grass, weeds, and brush. The Battle Ax Light deposits cut material over the entire width of cut, which eliminates bunching or windrowing behind the machine.

Operate and maintain this machine in a safe manner and in accordance with all applicable local, state, and federal codes, regulations, and/or laws, as well as in compliance with on-product labeling and these instructions.

Make sure that all personnel have read this owner's manual and thoroughly understand safe and correct operating, installation, and maintenance procedures.

Continuous improvement and advancement of Loftness products may result in changes to your equipment that may not be reflected in this publication. Loftness reserves the right to make product improvements to the machine at any time. Although great care has been taken to ensure the accuracy of this publication, Loftness assumes no liability for errors or omissions.

Warranty Policy

Be sure to read and understand the Warranty Policy at the beginning of this manual. It is also important that you complete the Warranty Registration form(s) with your dealer. Failure to do so may void the warranty.

Serial Number Location

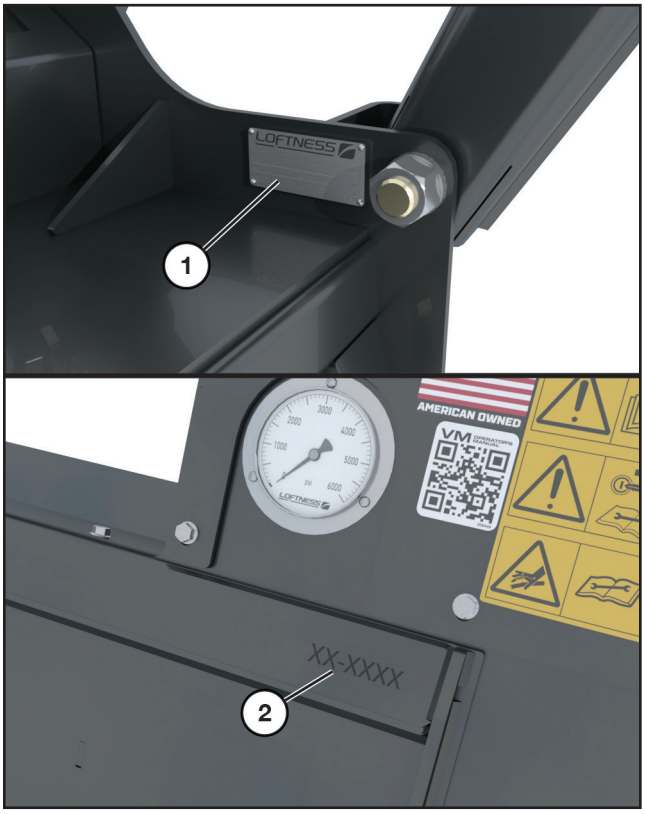

The machine serial number is shown on the tag (1) and is also stamped into the frame (2) on the skid steer mounting bracket.

Always use the model and serial number when requesting information or ordering parts.

Introduction

Owner's Manual Access

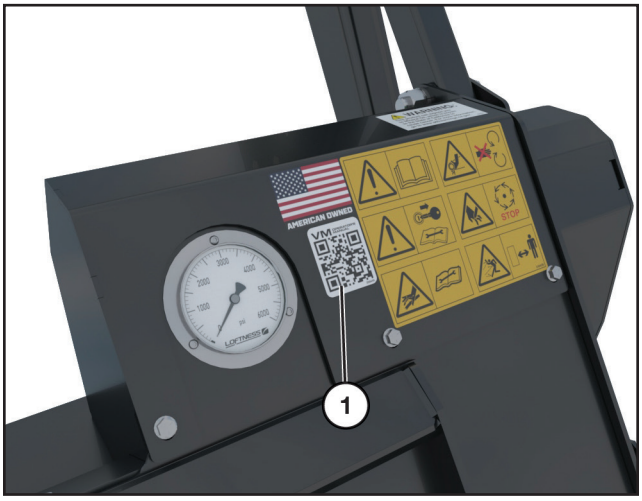

The Battle Ax Light is shipped with a printed owner's manual. The manual must be available to all operators. Keep it in a safe, dry location.

To access a digital owner's manual, use a smartphone to scan the QR code (1) located on the rear side of the motor cover. This code links to the Battle Ax Light owner's manual on the Loftness website.

Battle Ax Light Features

- Downward Rotation Design
- Premium Strength Steel Body and Rotor
- Front Mounted
- Hydraulic Driven
- Universal Skid-Loader Mount
- Adjustable Tree Pusher
- Claw Hooks on Tree Pusher
- Two-stage Cutting Chamber - *uses 2 shear bars, producing a finer mulch with less passes*
- Power Requirement - 15-35.9 GPM up to 4100 PSI - *30-70 hydraulic horsepower*
- Pressure Gauge
- Adjustable Axial Piston
- Rotor Speed 2000-2300 RPM
- 13.5 in. (34 cm) Diameter Rotor
- Efficient Staggered/Spiral Tooth Pattern
- Shankless, Planer Teeth (sharpenable), or Double Carbide
- 1.75 in. (44.5 mm) Piloted Double Taper Roller Bearings
- Anti Wrap Bearing Protection
- Heavy Duty Bearing Block
- Synchronous Belt Drive
- Tapered-Lock Sheaves
- Skid Shoes
- Steel Chain Deflectors
- Adjustable Shear Bar
- Built-in depth gauges - *controls cutting depth.*
- Hydraulic Hoses

Safety First

⚠	**Safety Alert Symbol** **This message alert symbol identifies important safety messages on the machine and in the owner's manual. When you see this symbol, be alert to the possibility of personal injury and carefully read the message that follows.**

In the owner's manual and on decals used on the machine, the words **DANGER, WARNING, CAUTION, IMPORTANT, and NOTE** are used to indicate the following:

DANGER: This word warns of immediate hazards which, if not avoided, will result in severe personal injury or death. The color associated with Danger is RED.

WARNING: This word refers to a potentially hazardous situation which, if not avoided, could result in severe personal injury or death. The color associated with Warning is ORANGE.

CAUTION: This word refers to a potentially hazardous or unsafe situation that, if not avoided, may result in minor or moderate injury. It may also be used to alert against unsafe practices. The color associated with Caution is YELLOW.

IMPORTANT: Highlights information that must be heeded.

NOTE: Reminds the operator of related information that should be considered.

If Safety Decals on this machine are ISO two-panel pictorial, decals are defined as follows:

- The first panel indicates the nature of the hazard.
- The second panel indicates the appropriate avoidance of the hazard.
- Background color is YELLOW.
- Prohibition symbols, such as ⊘ ✕ and STOP if used, are RED.

Be certain all machine operators are aware of the dangers indicated by safety decals applied to the machine, and be certain they follow all safety decal instructions. Contact Loftness for safety decal replacement.

Loftness cannot anticipate every possible circumstance that may involve a potential hazard. The warnings in this owner's manual are not all inclusive.

Owner's Responsibility

Due to the potential danger of flying debris, it is the owner's responsibility and "**ABSOLUTELY MANDATORY** that **IMPACT-RESISTANT SHIELDING**" be installed on the machine to protect the operator.

It is **ABSOLUTELY MANDATORY** that all personnel read and follow all safety precautions before operating the machine and attachment.

Make sure that all personnel have read this owner's manual and thoroughly understand safe and correct installation, operation, and maintenance procedures.

Operate and maintain this machine in a safe manner and in accordance with all applicable local, state, and federal codes, regulations and/or laws, and in compliance with on-product labeling and this owner's manual instructions.

Make sure that all personnel know how to stop the machine and attachment by disengaging all controls. See "Mandatory Shut-Down Procedure" on page 5.

Make sure the attachment is installed on the machine correctly before being placed into service. At regular intervals thereafter, the attachment should be serviced in accordance with procedures outlined in this owner's manual.

Mandatory Shut-Down Procedure

- Stop the machine and attachment on a level surface and lower the attachment to the ground.
- Move the throttle to the idle position.
- Disengage all power to the attachment.
- Shut off the engine and remove the key.

Wait until the rotor has stopped completely before inspecting the attachment.

Safety Rules

These are general safety considerations. Additional precautions may be necessary to operate your machine in a safe manner. Be certain you are operating your machine in accordance with all safety codes, OSHA rules and regulations, insurance requirements and local, state, and federal laws.

- Read and observe all warning decals on the machine before attempting to operate the attachment. Do not attempt to operate this attachment unless all factory devices and decals are in place. Keep safety decals clean of dirt and grime. Keep all guards, shields, and decals in place.
- Remove from area of operation all foreign objects such as bottles, rocks, wire, etc., that might become tangled in the rotor, causing damage to the machine or be thrown and strike other objects.
- Do not allow people or animals within 300 feet of the machine and attachment during operation.
- Do not allow anyone to operate the attachment until he or she has read the owner's manual and is completely familiar with all safety precautions. Keep the work area clear of all unauthorized personnel.
- Do not allow persons under the influence of alcohol, medications, or other drugs that can impair judgment or cause drowsiness to operate or maintain the machine.
- Always use an approved roll bar and seat belt for safe operation. Overturning a machine without a roll bar and seat belt can result in injury or death.
- Use the handholds and step plates when getting on and off the machine to prevent falls. Keep steps and platform cleared of mud and debris.
- Always have an operator in the machine while the attachment is in operation. Never leave the machine and attachment running and unattended.
- Operate the attachment only from the operator's seat.
- Keep your feet on the pedals (floor plates) seat belt fastened snugly and seat bar lowered, (if equipped), when operating the attachment.
- The adjustable push bar could contact the machine in some positions. Before starting the power unit, set the push bar in the most forward position, then slowly rotate the attachment back while an assistant checks for clearance. Repeat this process in the other settings to determine which positions are usable with your machine.
- Never attempt to make any adjustments while the attachment is running or the key is in the "ON" position in the machine. Before leaving the operator's position, disengage power to the attachment, shut off the engine and remove ignition key.
- Disengage auxiliary hydraulics and place all machine controls in neutral and engage the parking brake before starting the engine.
- Become familiar with and know how to operate all safety devices and controls on the machine and attachment before attempting to operate. Know how to stop the machine and attachment before starting it.
- Repeated impact of the knives with hard objects can cause excessive wear and damage to the skid-loader or attachment. Be sure to maintain recommended ground clearance as specified in this manual.
- Should excessive vibration occur, disengage the auxiliary hydraulics immediately and shut off the engine. Do not continue to operate the attachment until the problem has been determined and corrected.
- Do not start, operate, or work on this attachment until you have carefully read and thoroughly understand the contents of this manual and the operator's manual for your machine.
- Keep children, bystanders, and other workers off and away from the machine and attachment during operation. No riders allowed.
- Before inspecting, cleaning, lubricating, adjusting or servicing any part of the attachment, always exercise the Mandatory Shut-Down Procedure. See "Mandatory Shut-Down Procedure" on page 5. After service has been performed, be sure to restore all guards, shields, and covers to their original position.
- Make sure the operator's area is clear of any distracting objects. Keep work areas clean and free of grease and oil to avoid slipping or falling.

Safety Rules (Cont'd)

- Make sure all controls (levers, pedals and switches), are in NEUTRAL position before starting the engine.
- Before leaving the operator's position for ANY reason or allowing anyone to approach the machine and attachment, always perform the mandatory shut-down procedure.
- Do not wear loose-hanging clothes, neckties or jewelry around rotating parts. Long hair is to be placed under a cap or hat. These precautions will help prevent you from becoming caught in any moving parts on the machine and attachment.
- Before working under the attachment, be certain it is securely blocked!
- Do wear safety glasses, ear protection, respirators, gloves, hard hats, safety shoes and other protective clothing when required.
- Periodically check all guards, shields and structural members. Replace or repair anything that could cause a potential hazard.
- Do not replace components or parts with other than factory-recommended service parts. To do so may decrease the effectiveness of the machine.
- It is the operator's responsibility to be aware of machine and attachment operation and work area hazards at all times.
- Never operate the attachment without adequate light and visibility.
- Keep hands and feet clear! Never step over or climb over the attachment while the rotor is engaged or the engine is running; entanglement could occur.
- Operators are responsible to know the location and function of all guards and shields including, but not limited to, belt drives and the rotor. Operators are responsible to make certain that all guards are in place when operating the machine and attachment.
- Operators are responsible to be aware of safety hazard areas and follow instructions on warning, caution, or danger decals applied to the machine.
- Know the area before operating the machine. Be aware of power lines or other equipment.
- Do not lubricate parts while the machine is running.
- Do not smoke while servicing the machine.

Hydraulic Safety

- The hydraulic system is under high pressure. Make sure all lines and fittings are tight and in good condition. Fluid escaping under high pressure can have sufficient force to penetrate skin and cause serious injury.
- Never check for leaks by using any part of your body to feel for escaping fluid.

⚠	**WARNING:** *Contact with high-pressure fluids may cause fluid penetration and burn hazards. Fluid that is under pressure can penetrate body tissue. Fluid penetration can cause serious injury and possible death. If fluid is injected into the skin, seek medical attention immediately!*

California Proposition 65 Warning

For California Models Only

⚠	**WARNING:** *This product can expose you to Mineral Oil, which is known to the State of California to cause cancer. For more information, go to www.p65warnings.ca.gov.*

A decal with this warning statement is adhered to the machine. If the decal should become worn or missing, replace it immediately.

Safety Decals

Check and replace any worn, torn, hard to read or missing safety decals on your machine.

Locations

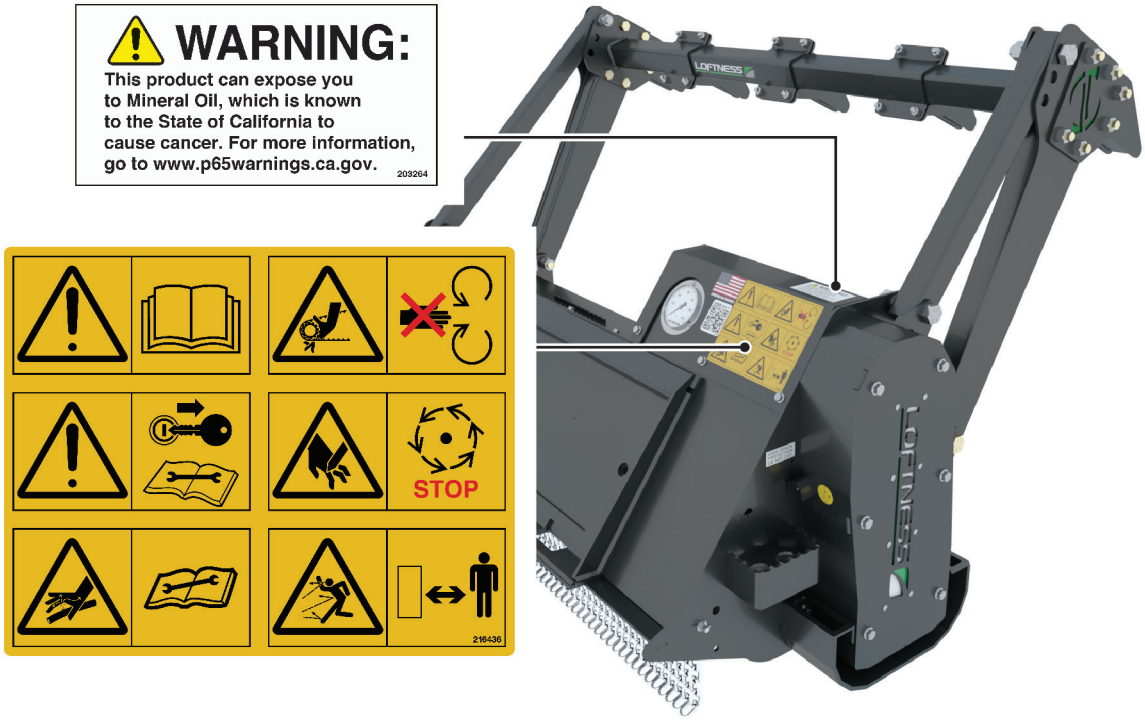

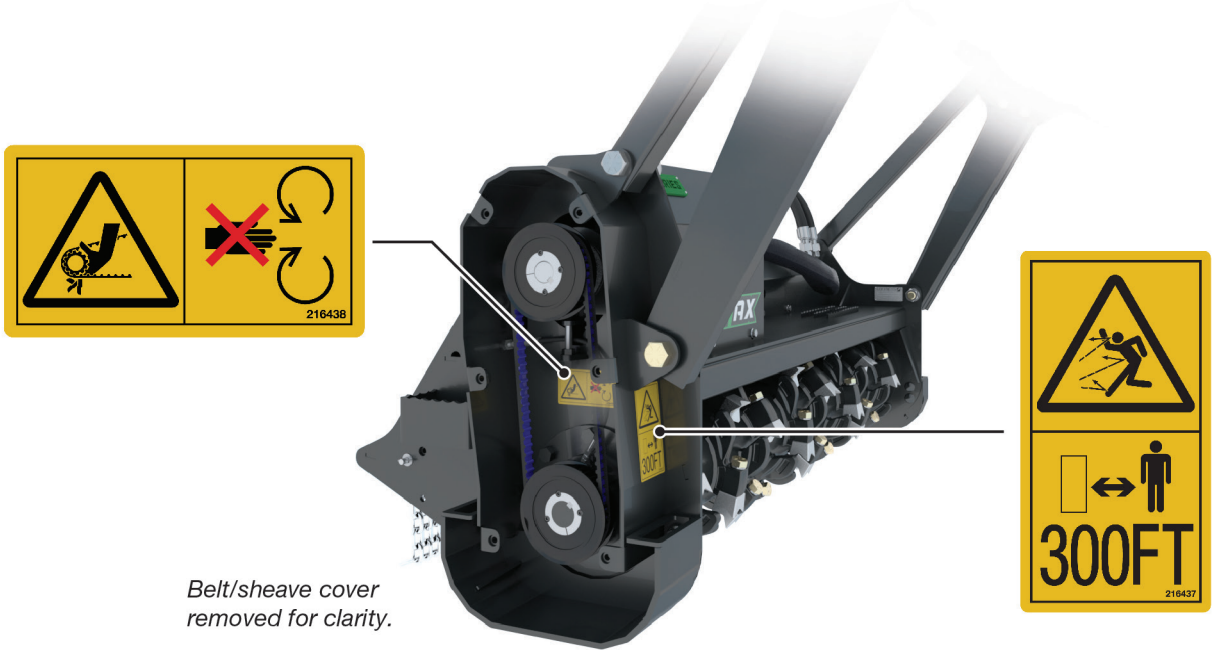

Belt/sheave cover removed for clarity.

Safety Decals

Defined

Loftness decal part number **- 216436**	
	Caution - General • Read and understand operator's manual before using this machine. • Do not operate machine in a manner for which it was not intended. • Failure to follow operating instructions could result in death or serious injury.
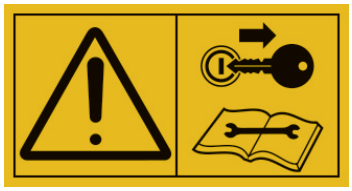	**Caution - General** • Shut off the engine and remove key before performing maintenance or repair work.
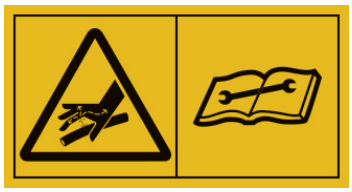	**Danger - Skin Puncture Hazard** • Protect hands and body from high-pressure fluids. • High-pressure fluid leaks can penetrate skin and cause severe injury, burns, or death. Seek immediate medical attention if fluid is injected into the skin. • Read operator's manual for proper service procedures.
	Danger - Hand and Arm Entanglement • Keep hands and feet away from moving parts. • Do not open or remove safety shields while engine is running. • Turn off engine before servicing.
	Danger - Cutting Hazard • Keep hands and feet away from cutting knives. • Wait until all machine components have completely stopped before servicing.
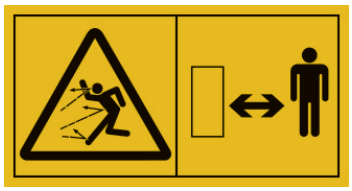	**Danger - Thrown or Flying Object Hazard** • Flying debris can cause severe injury or blindness. • Keep all bystanders, coworkers, and animals a safe distance from the machine during operation. • Always wear eye protection and required personal protective equipment (PPE).

Safety Decals (Cont'd)

Defined (Cont'd)

Loftness decal part number **- 216437**

Danger - Thrown or Flying Object Hazard

- Flying debris can cause severe injury or blindness.
- Keep all bystanders, coworkers, and animals at least 300 ft. (91 m) away from the machine during operation.
- Always wear eye protection and required personal protective equipment (PPE).

Loftness decal part number **- 216438**

Danger - Hand and Arm Entanglement

- Chain or toothed belt drive
- Keep hands and feet away from moving parts.
- Do not open or remove safety shields while engine is running.
- Turn off engine before servicing.

Loftness decal part number **- 203264**

For Battle Ax models operating in the State of California

Warning - California Proposition 65

- This label is a regulatory requirement for machines operating within the State of California. It informs personnel of chemical exposure risks, allowing operators and technicians to implement necessary safety measures during equipment operation and servicing.

Battle Ax Light Identification

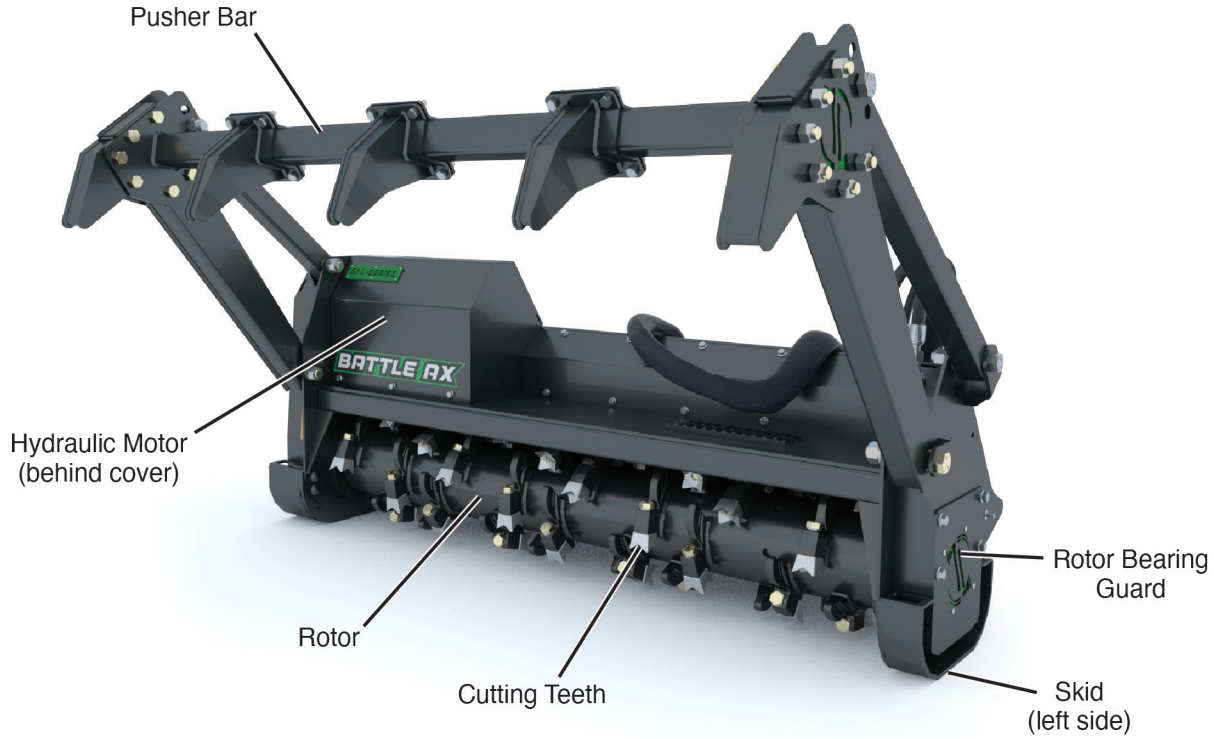

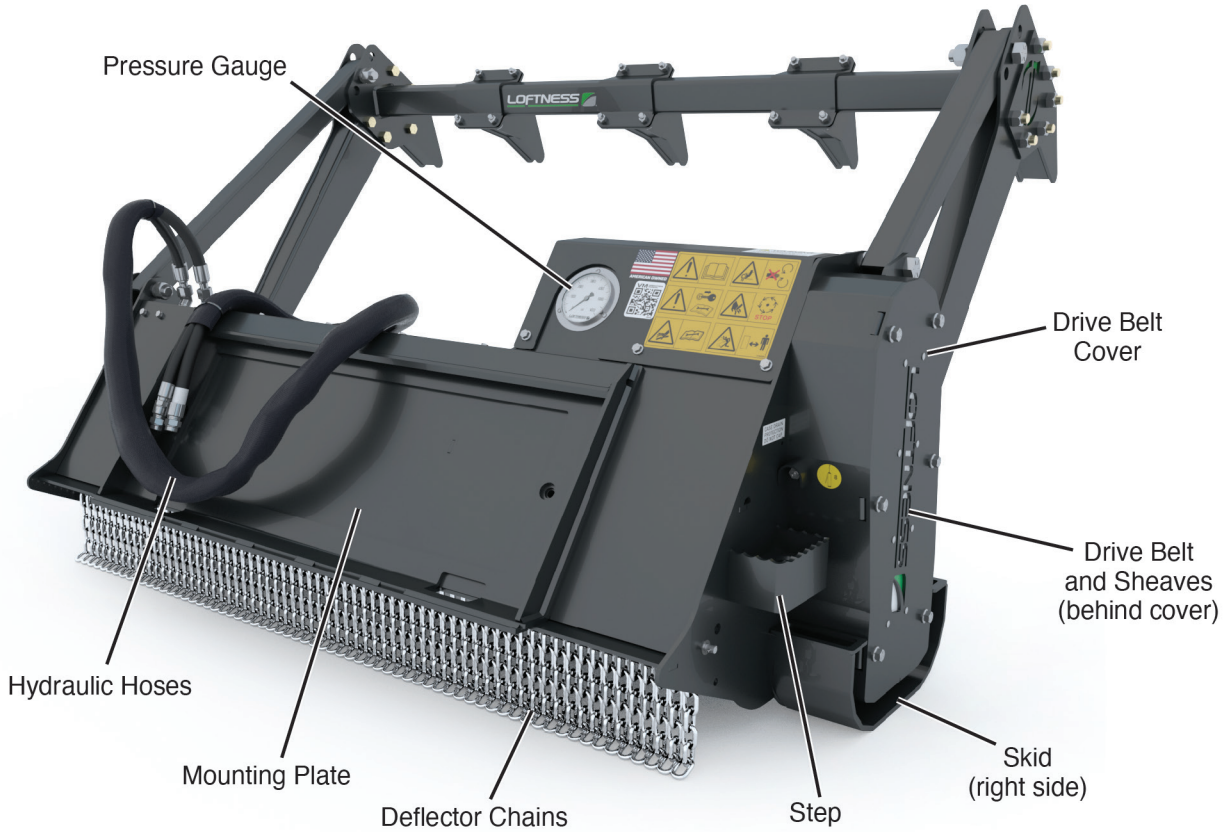

Pusher Bar Assembly

⚠	**CAUTION:** *The pusher bar assembly is heavy. Use an approved lifting device to support the pusher bar during assembly.*

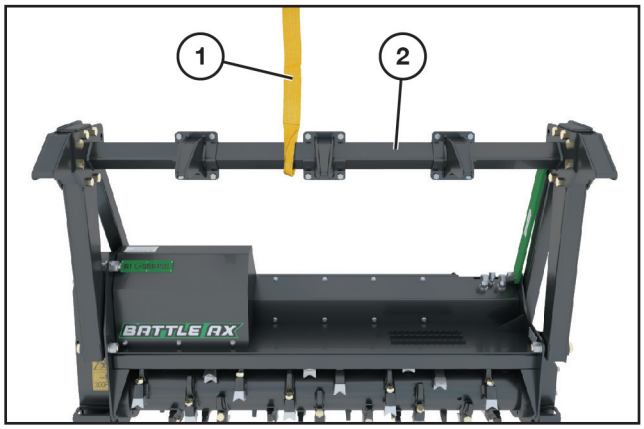

Secure the lifting strap (1) to the pusher bar center tube (2).

Removing the Shipping Bar

The Battle Ax Light is shipped with a shipping bar installed to support the pusher bar in the upright position during transport. The shipping bar must be removed before placing the Battle Ax Light into service.

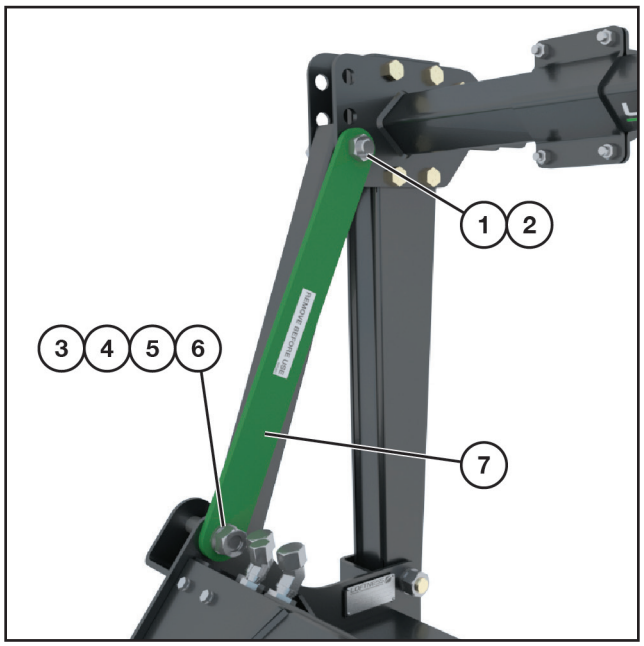

Remove the nut (1) and lock washer (2) from the upper bolt. Do not remove the bolt.

Remove the lower nut (3), lock washer (4), bolt (5), and flat washer (6) securing the shipping bar (7) and set aside.

Remove the shipping bar.

NOTE: *The shipping bar is no longer required and may be discarded.*

Reinstall the upper lock washer and nut. Hand-tighten only.

Assembly

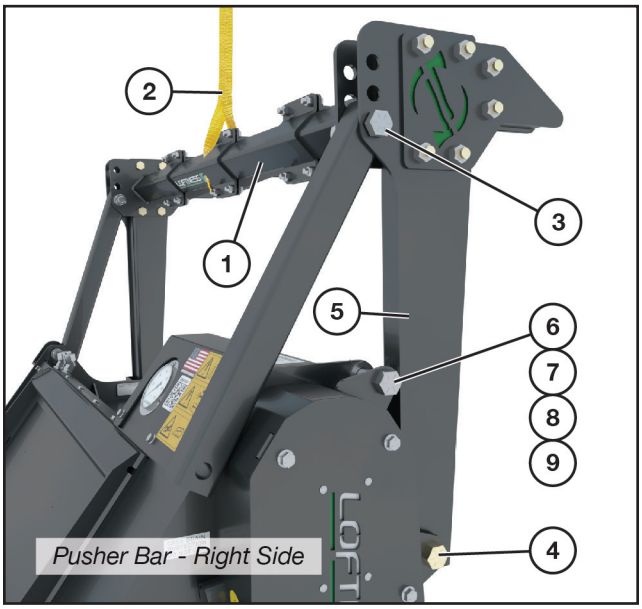

Ensure the pusher bar (1) is securely supported by the hoist and lifting strap (2).

Loosen the nuts at locations (3) and (4) on the right-side pusher arm (5).

Remove the nut (6), lock washer (7), bolt (8), and flat washer (9) from the tube bracket. Set the hardware aside.

(Procedure continued on following page.)

Pusher Bar Assembly (Cont'd)

Assembly (Cont'd)

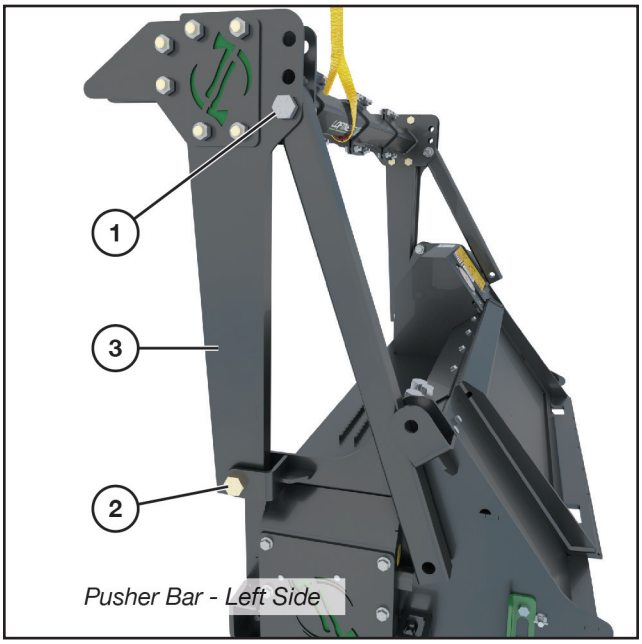

Loosen the nuts at locations (1) and (2) on the left-side pusher arm (3).

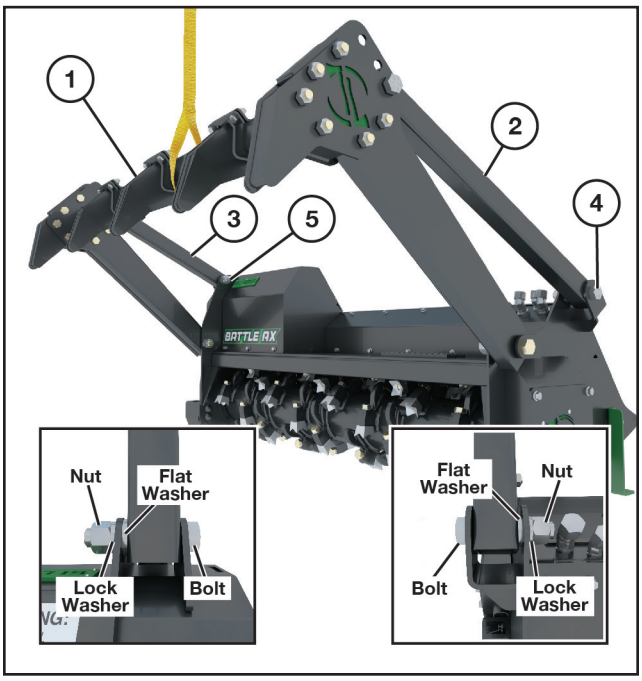

Lower the pusher bar (1), then pivot the left tube (2) and right tube (3) into position until the lower hole in each tube aligns with the corresponding hole in the tube brackets (4—left; 5—right).

Once aligned, reinstall the hardware removed earlier, ensuring it is installed as shown.

If this is the desired pusher bar position, tighten all hardware securely.

If a different pusher bar position is desired, proceed to "Repositioning the Pusher Bar".

Repositioning the Pusher Bar

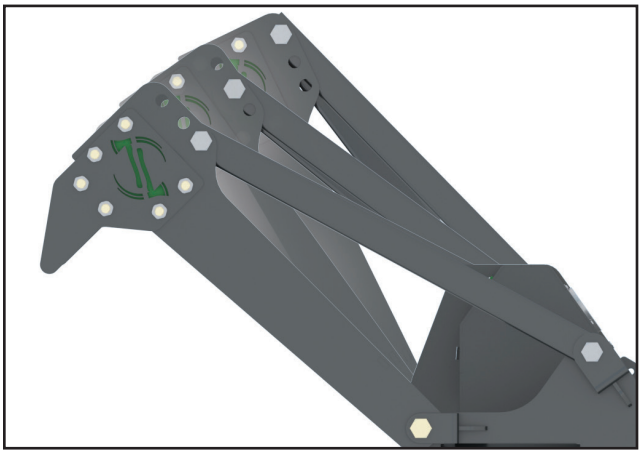

The pusher bar can be placed in one of three operating positions, as shown above.

(Procedure continued on following page.)

Pusher Bar Assembly (Cont'd)

Repositioning the Pusher Bar (Cont'd)

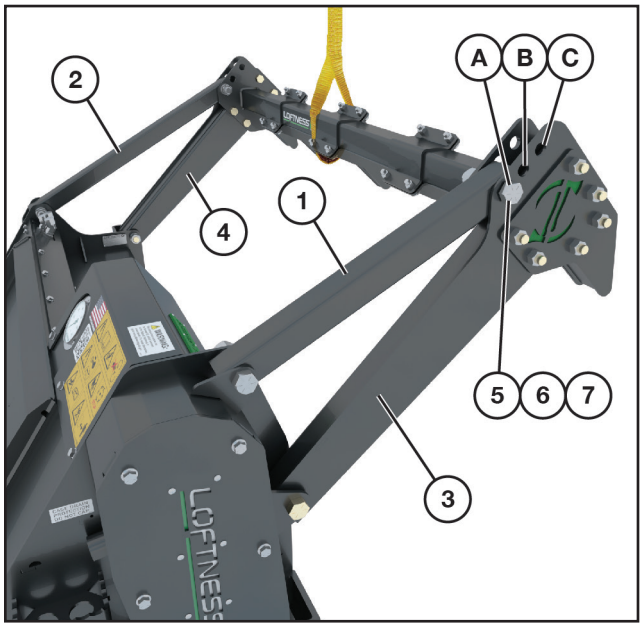

The pusher bar is factory-set with the upper hole in each rear tube (1 and 2) aligned with hole A in the pusher arms (3 and 4).

If a different pusher bar angle is desired, ensure the pusher bar is supported. While supporting the right-side tube, remove the nut (5), lock washer (6), and bolt (7) securing the tube to the right-side pusher arm.

Allow the tube to rest on the pusher arm.

Remove the corresponding nut, lock washer, and bolt from the left side of the pusher assembly.

Raise or lower the pusher bar until the upper hole in each rear tube (1 and 2) aligns with the desired hole (A, B, or C) in the left and right pusher arms (3 and 4).

Reinstall all hardware.

Tighten all hardware securely on both sides (six locations total).

Remove the lifting device.

Remove Shipping Stands

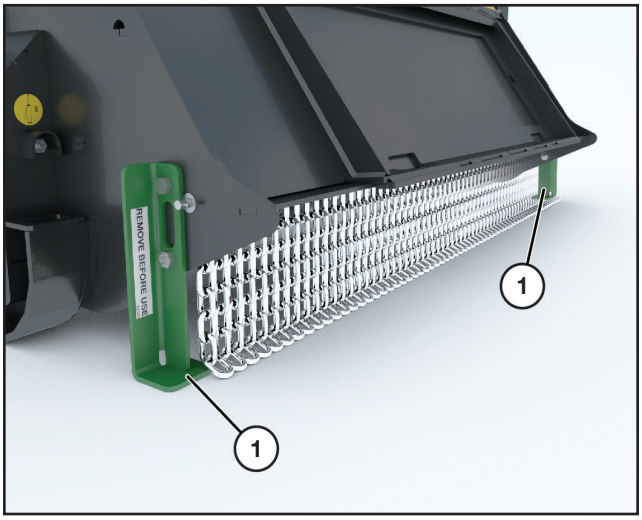

Two stands (1) are secured to the Battle Ax to keep it stable during shipping. They can be removed after the pusher bar has been moved to the operating position.

NOTE: *Do not discard the shipping stands. They are used to stabilize the Battle Ax during storage. Keep them in a secure location until ready to store the Battle Ax.*

Installing the Battle Ax Light to the Loader

Fully raise the attachment-locking levers on the loader mounting plate.

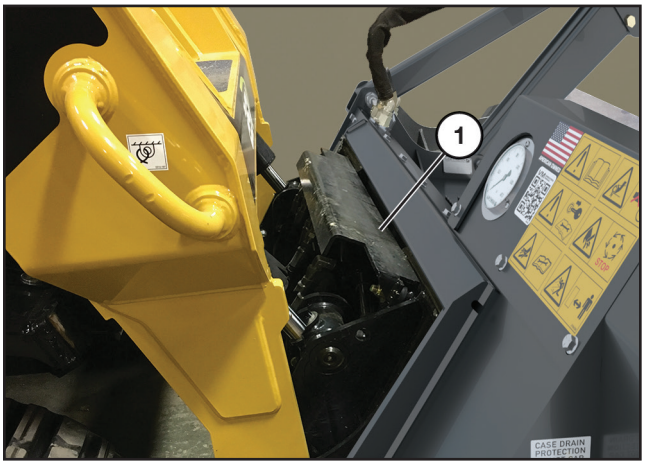

Tilt the loader mounting plate ahead. Drive forward with the loader and hook the top edge of the loader mounting plate under the top flange (1) on the Battle Ax Light mounting plate. Be careful not to damage the locking levers on the loader mounting plate.

Tilt the loader mounting plate back until the mulcher mounting plate is firmly against the loader mounting plate, but Do Not lift the attachment off the ground.

⚠	**WARNING:** *Before you leave the operator's seat: Lower the lift arms, put the attachment on the ground. Stop engine and remove ignition key. Engage the parking brake.*

Fully lower the attachment-locking levers on the loader mounting plate.

⚠	**WARNING:** *Locking-wedge pins must extend through the holes in attachment-mounting plate. Levers must be fully down in the locked over-center position. Failure to secure wedge pins can allow attachment to come off, causing serious injury or death.*

Hydraulic Connections

⚠	**WARNING:** *Hydraulic Lines. Protect hands and body from high-pressure fluids. Pressurized fluids can penetrate the skin. Disconnect and lock out the power source before disconnecting and/or connecting hydraulic hoses.*

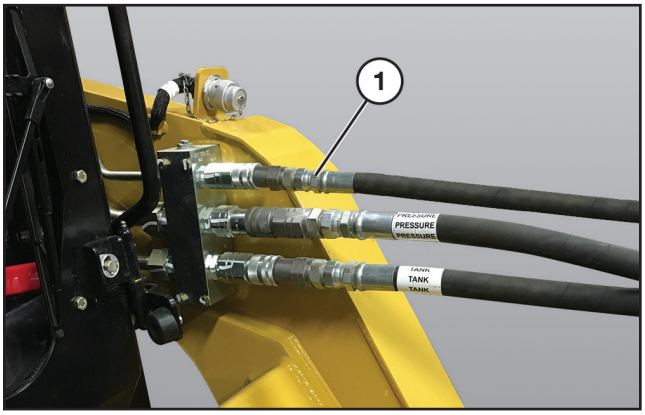

NOTE: *The hydraulic hose quick couplers shown above are not supplied with the Battle Ax Light.*

Install the Battle Ax Light quick couplers to the loader.

NOTE: *The case drain quick coupler (1) of the Battle Ax Light must be connected to the loader's auxiliary hydraulic system for proper operation of the Battle Ax Light.*

IMPORTANT: *It is the owner's responsibility to ensure that the hydraulic hoses from the power unit to the attachment are not caught in pinch points, or in any way damaged by moving parts.*

Checking Rotor Rotation

DANGER: *Keep hands, feet, and clothing clear of rotor and bearings while the loader is running.*

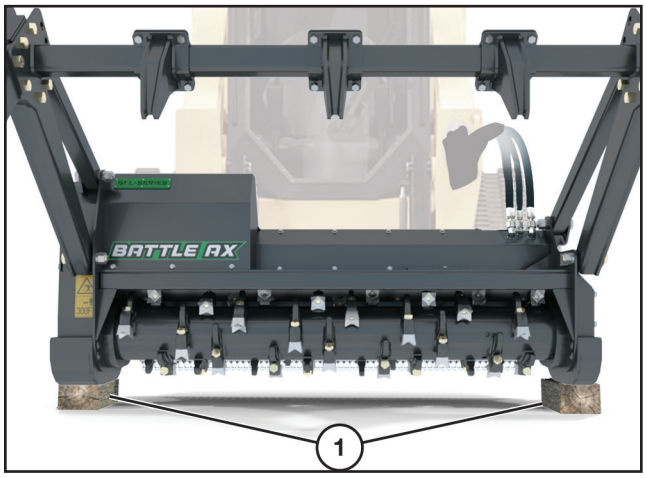

Raise the Battle Ax Light off the ground and place blocks (1) underneath the skids. Lower the Battle Ax Light down on the blocks.

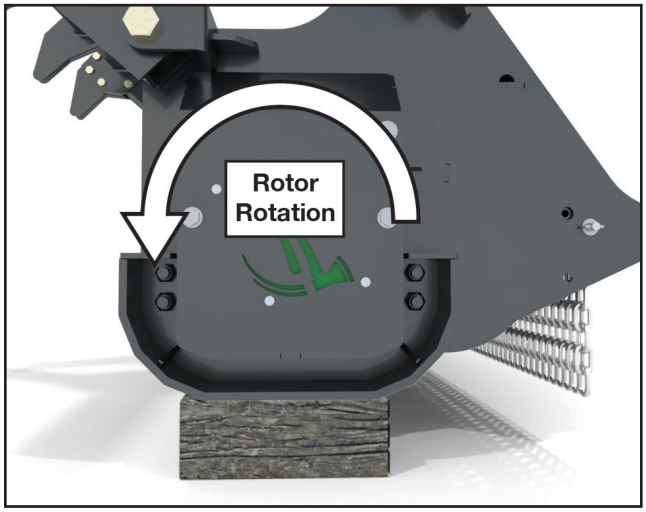

Engage the loader auxiliary hydraulics. The rotor should start rotating in a forward direction. The rotation should be counterclockwise as viewed from the left side of the Battle Ax Light.

NOTE: *If the rotor is rotating backward, reverse the quick couplers (not supplied) on the Battle Ax Light hydraulic hoses. Reinstall the couplers (not supplied) on the loader and test for correct rotor rotation.*

WARNING: *The Battle Ax Light can be damaged if the rotor is operated in reverse rotation.*

Checking Rotor Speed

DANGER: *Shut down power from the loader before removing the belt cover and applying reflective tape to the sheave. Keep the Battle Ax Light skids on blocks for this procedure.*

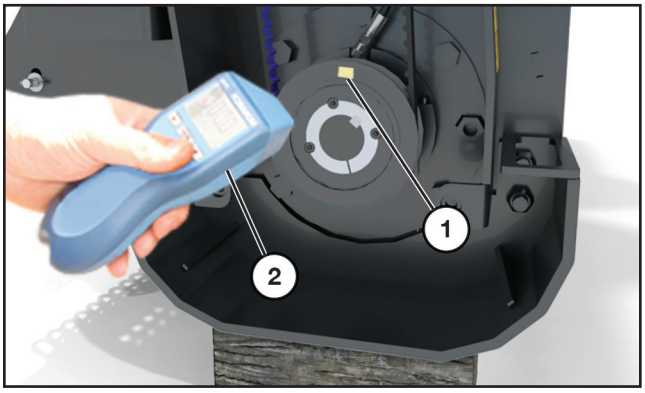

Remove the belt cover. See “Removing Belt Cover” on page 25 for instructions.

Apply a small piece of reflective tape (1) to the outer edge of the lower sheave.

Start the loader and engage the auxiliary hydraulics.

DANGER: *Keep hands, feet, and clothing clear of the rotor, belt, and sheaves while the loader is running.*

Point an electronic (photo) tachometer (2) toward the edge of the sheave to check the rotor speed.

NOTE: *The tachometer is not supplied.*

Test the rotor RPM with the loader engine at full throttle.

If the RPM falls outside the recommended range, follow the procedure “Adjusting Rotor RPM” on page 18 for instructions on making the necessary adjustments to correct the rotor RPM.

If the rotor RPM is within the recommended range, turn off the loader and reinstall the belt cover. Secure the belt cover with the six bolts.

Adjusting Rotor RPM

NOTE: *The motor is preset at the factory to maximum displacement. Motor displacement must be adjusted according to the recommendations below for best performance.*

Rotor RPM can be fine-tuned for different applications:

- *A higher rotor speed may be desirable for units equipped with Quadco teeth.*
- *A lower rotor speed will provide more torque and may be more desirable for units equipped with carbide teeth.*

Recommended Rotor RPM by Hydraulic Flow Rate		
Hydraulic Flow Rate	**Recommended Rotor RPM**	**Maximum RPM**
15–25.9 GPM	2,000 RPM	2,150 RPM
26–35.9 GPM	2,200 RPM	2,300 RPM

IMPORTANT: *Do not exceed the specified maximum rotor RPM for the applicable hydraulic flow range.*

⚠	**DANGER:** *Shut down power from the loader before removing the motor cover to gain access to the motor.*

Remove the motor cover. See “Removing Motor Cover” on page 26 for location and removal instructions.

Ensure blocks are positioned under the skid shoes and the pusher bar is in one of the three operating positions, not the shipping position.

Start the loader and engage the auxiliary hydraulics to turn the rotor. Operate the loader at full throttle.

IMPORTANT: *If equipped, ensure the loader’s auxiliary hydraulics are set to high flow.*

⚠	**DANGER:** *Stay clear of the drive belt area when adjusting the motor or checking rotor RPM. Keep hands, feet, and clothing clear of the rotor, belt, and sheaves at all times. Failure to do so may result in serious injury or death.*

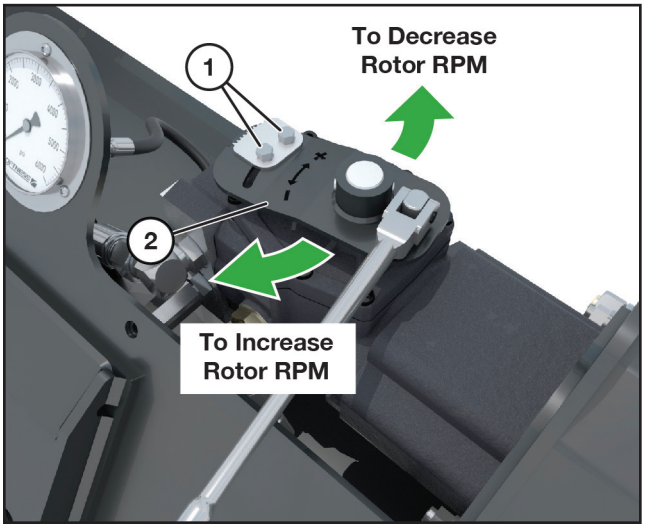

To INCREASE ROTOR RPM:

- Use a 7/16" wrench to loosen the two bolts (1) that secures the adjusting bracket (2) on the motor
- Use a 1/2" breaker bar and rotate the adjusting bracket **clockwise to increase** the rotor RPM. Turn the bracket slowly until the rotor RPM is within the recommended range.
- Once the correct RPM is achieved, retighten the two bolts securely. Ensure bolts are torqued to 71 in-lb (6 ft-lb).

To DECREASE ROTOR RPM:

- Use a 7/16" wrench to loosen the two bolts (1) that secures the adjusting bracket (2) on the motor
- Use a 1/2" breaker bar and rotate the adjusting bracket **counterclockwise to decrease** the rotor RPM. Turn the bracket slowly until the rotor RPM is within the recommended range.
- Once the correct RPM is achieved, retighten the two bolts securely. Ensure bolts are torqued to 71 in-lb (6 ft-lb).

When final adjustments have been made, turn off the power from the loader and reinstall the belt cover and motor cover, securing with the required bolts.

If there is difficulty achieving the recommended RPM, it may be necessary to disconnect the Battle Ax Light and test the hydraulic output of the loader with a flow meter and compare the measured flow rate with the factory specifications.

Cutter Bar Adjustment

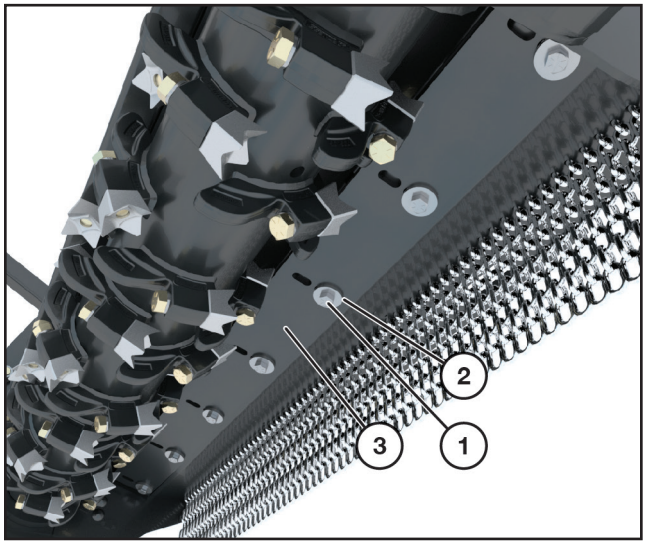

NOTE: *The cutter bar can be adjusted backward or forward to increase or decrease the distance between the bar and the rotor.*

Most operators find the best performance is achieved by adjusting the cutter bar as close as the slots will allow (approximately a 1/4" gap from knife to cutter bar). A wider gap generally increases finished particle size and horsepower requirements.

⚠	**WARNING:** *Shut down and disconnect the hydraulic hoses from the loader before adjusting the cutter bar.*

Loosen the series of bolts (1) with washers (2) securing the cutter bar (3) to the frame. Move the cutter bar either forward or backward, making sure the distance moved is consistent through the entire length of the cutter bar. Retighten bolts.

Over time, the cutter bar edge will become worn and rounded from use. There are a total of 4 wear edges available by removing and flipping the bar, side to side and front to back.

⚠	**CAUTION:** *If adjusting the cutter bar after the machine has been used, the cutter bar should be completely removed to clear any debris away from contact surfaces before assembly and tightening. FAILURE TO DO SO COULD RESULT IN SEVERE DAMAGE TO THE MACHINE!*

Getting Started

Visually inspect the unit before starting the machine. Check for loose or missing parts. Check all bolts for tightness.

For best results, the areas to be mowed should be free of debris such as bottles, metal objects, rocks, wire, etc. The teeth cut and pulverize the brush, grass, and weeds.

For first-time users, start the machine in a clear, open area and become familiar with the controls. Run the throttle at half speed and travel at a low speed. Raise the mulching head only slightly until comfortable with the machine.

WARNING: *Due to the potential danger of flying debris, it is the owner's responsibility and is "ABSOLUTELY MANDATORY that IMPACT-RESISTANT SHIELDING" be installed on the machine to protect the operator.*

WARNING: *Lifting or tilting the Battle Ax Light increases the risk of flying debris.*

DANGER: *Keep hands and feet out! Do not step on or climb over the unit while the machine is in operation, or the engine is running. Do not carry passengers.*

WARNING: *Do not operate the attachment above the rated RPM. Check with your Loftness dealer to be sure your attachment is set up with the correct hydraulic motor to match the hydraulic flow rate (Gallons Per Minute) of your machine.*

WARNING: *Flying debris can gather on the loader and needs to be cleaned off, especially around the radiator, oil cooler screens, engine compartment, and exhaust areas. Periodic cleaning will help prevent the possibility of fire.*

DANGER: *DO NOT allow ANY people or animals within 300 feet of the work area while operating this machine.*

Operation

WARNING: *Always stop the engine and remove the key before leaving the operator's seat.*

Tilt attachment mounting frame back and raise the Battle Ax Light slightly above the ground when moving the machine.

Lower the mulching head so skids are on ground.

Set engine speed to low idle and engage the rotor.

Slowly increase engine speed to high idle.

Move the loader and Battle Ax Light forward and begin mowing.

NOTE: *Various mowing conditions, and desired finished cut appearance, will determine proper ground speed.*

Operating Tips

To reduce rotor jams, approach brush and trees at a slow speed.

When operating the mulching head near the ground, keep it as low to the ground as possible without the teeth striking ground or other obstructions.

NOTE: *Because of the high speed of the rotor, the life of the teeth will be reduced if it is operated in rocky terrain or in areas where many obstacles are present.*

Clearing Jams

If the rotor stalls, or gets jammed with debris, stop the rotor and raise slightly. Start the rotor again to free debris.

⚠	**WARNING:** *Do not attempt to dislodge jams by hand while the loader is running. Shut down and lock out power from the loader before attempting to remove debris by hand.*

Log Moving

Disengage hydraulic power to the rotor before moving logs and brush with pusher bars.

Raise the loader lift arms and tilt the Battle Ax Light forward until the push bar extensions are over the log or item being moved. Lower the lift arms and position the log between push bar extensions and the Battle Ax Light. Move the loader backward, dragging the log to the desired location.

Detaching Battle Ax Light

Park the loader on a dry, level surface. Place blocks underneath the skids if necessary.

Lower the Battle Ax Light to the ground.

Shut off the engine and remove the key.

Make sure the rotor has stopped completely before continuing.

Disconnect the hydraulic hoses and coil neatly on top of the Battle Ax Light.

Detach the loader from the mounting plate.

⚠	**WARNING:** *Do not attempt to detach the Battle Ax Light while the loader is running. Shut down and lock out power from the loader before detaching.*

General Maintenance

To ensure efficient operation, inspect, lubricate, and make necessary adjustments and repairs at regular intervals. Parts that are beginning to show wear should be ordered in advance, before a costly breakdown occurs and replacement parts are needed. Keep accurate maintenance records, and thoroughly clean your Battle Ax Light after each use.

Proper lubrication is important. Too little lubricant will cause premature bearing failure. Too much lubrication usually causes high operating temperatures and premature seal failure. Follow all lubrication instructions and schedules included in this section.

Maintenance Schedule

HOURS	SERVICE POINTS	SERVICE REQUIRED					
		CHECK	CLEAN	CHANGE	GREASE	ADJUST	OIL
Every 8	Machine		X				
	Loose Bolts					X	
	Hoses and Wiring	X					
	Oil Leaks	X					
	Rotor Bearing				X		
	Teeth	X					
Every 100	Belt Tension	X					
	Drive Belt	X					
	Safety Labels	X					
Every 500	Hydraulic Motor	X					
	Overhung Load Adapter	X					X

Lubrication

Grease Points Location

Use a #2 general-purpose lithium-based grease unless noted otherwise.

NOTE: *Replace any broken or missing grease fittings. Be sure to clean fittings before greasing.*

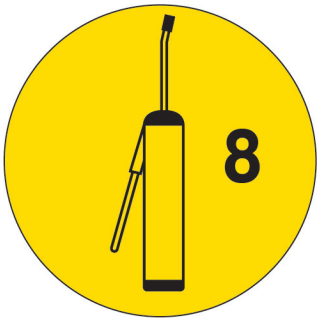

NOTE: *Lubricate the grease point every "X" hours indicated on the decal adjacent to the grease point.*

See "Battle Ax Light Identification" on page 11 for component location and identification.

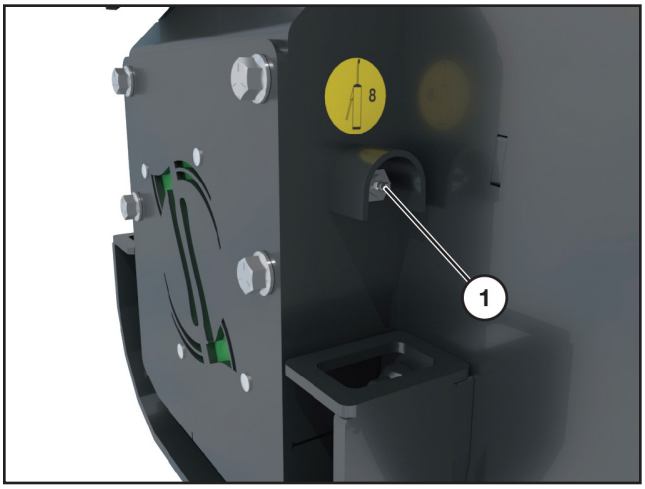

Location: Left side rotor bearing (1).
Interval: Every 8 hours of operation.

NOTE: *Rotor bearings cannot be damaged by over-greasing. Lubricate the fittings until a small amount of grease is purged from the bearing.*

Lubrication (Cont'd)

Grease Points Location (Cont'd)

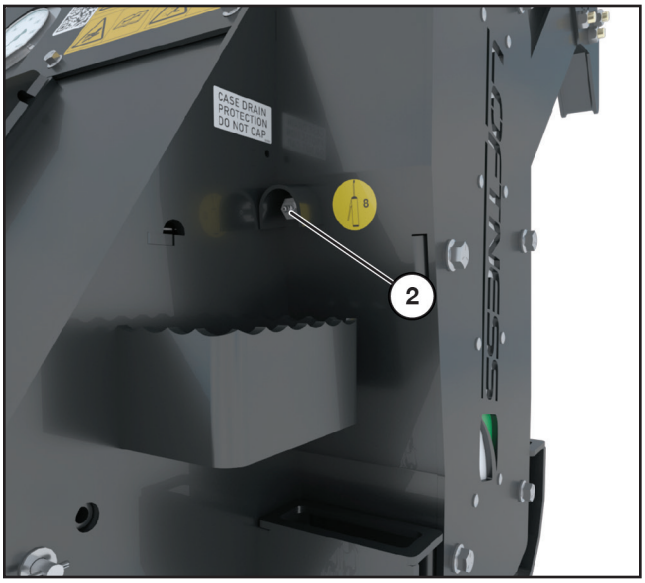

Location: Right side rotor bearing (2).
Interval: Every 8 hours of operation.

NOTE: *Rotor bearings cannot be damaged by over-greasing. Lubricate the fittings until a small amount of grease is purged from the bearing.*

Overhung Load Adapter

The motor must be removed to access the overhung load adapter. Refer to "Removing Motor Cover" on page 26 for instructions.

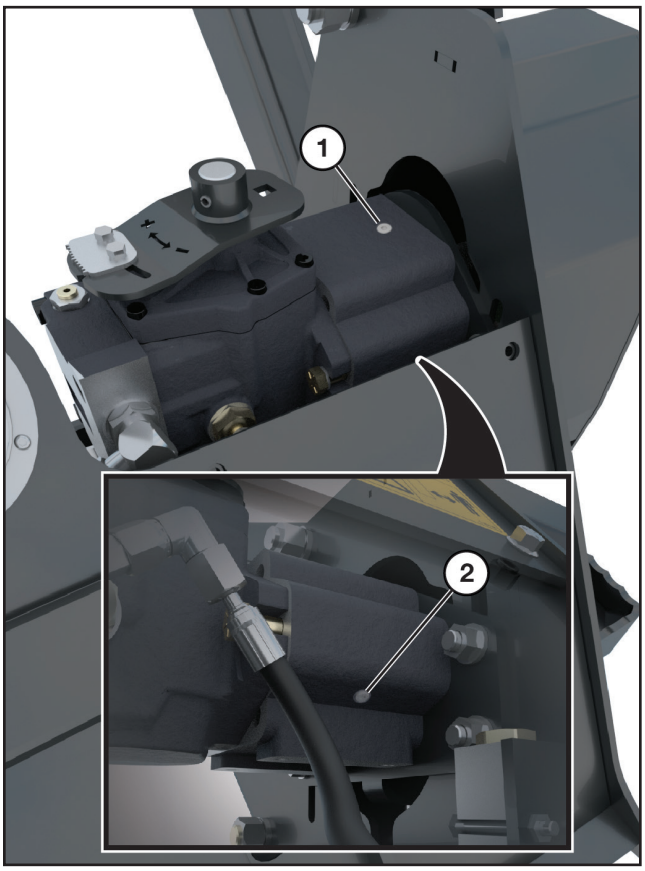

Remove the plug from the port (1) located on the top of the overhung load adapter, and the plug from the lower port (2) located on the back side.

Partially tilt the Battle Ax Light back toward the skid steer to drain the hydraulic oil.

Reinsert the lower plug and tighten.

Using a funnel placed in the top port of the overhung load adapter, add 4 oz. of universal hydraulic fluid.

Return the plug to the top port and tighten.

NOTE: *If replacing bearings or seals in the overhung load adapter, be certain to refill with hydraulic fluid after reassembly.*

Removing Belt Cover

⚠	**DANGER:** *Shut down power from the loader before removing the belt cover. Failure to do so could result in serious injury or death.*

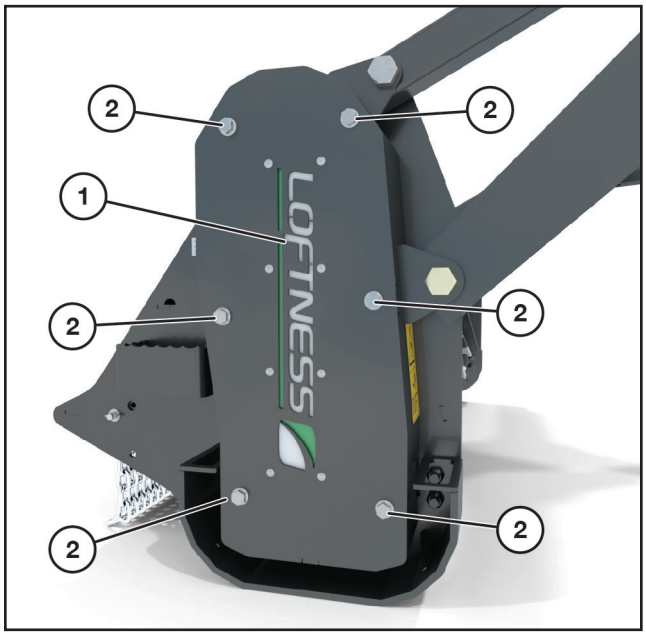

To remove the belt cover (1), unscrew the six bolts (2) and lift the cover off the frame.

⚠	**CAUTION:** *The belt cover is heavy. Support the cover when removing.*

When maintenance/repairs are complete, return the cover to position and tighten and secure all bolts.

Removing Left End Bearing Cover

⚠	**DANGER:** *Shut down power from the loader before removing the bearing cover. Failure to do so could result in serious injury or death.*

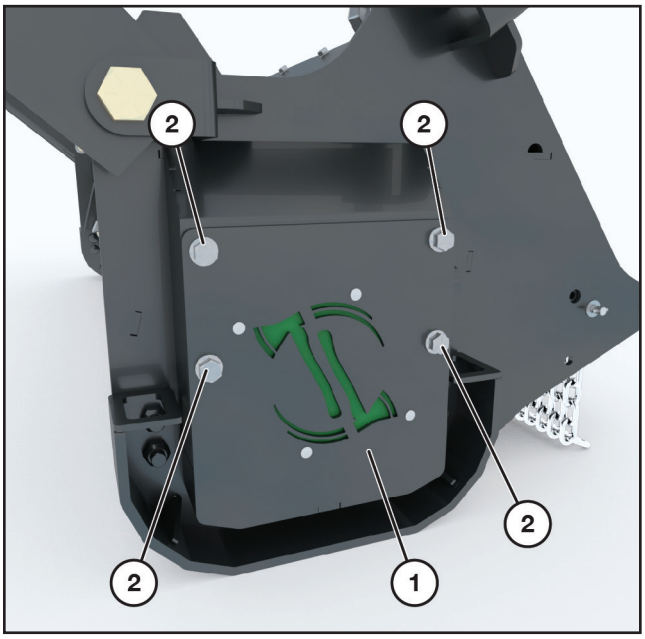

To remove the left side bearing cover (1), unscrew the four bolts (2) and lift the cover off of the frame.

When maintenance/repairs are complete, return the cover to its original position and tighten and secure all bolts.

Removing Motor Cover

⚠	**DANGER:** *Shut down power from the loader before removing the motor cover. Failure to do so could result in serious injury or death.*

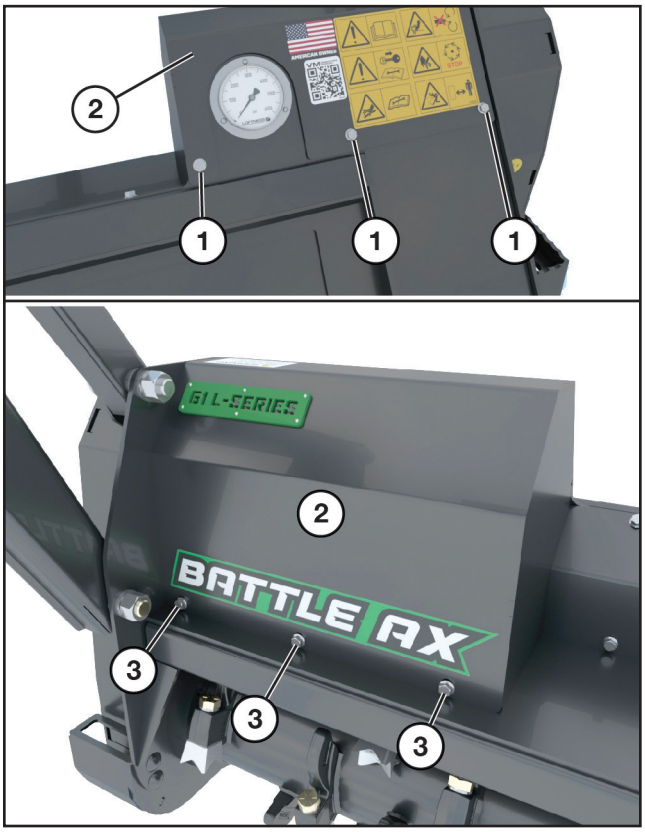

Remove the three bolts (1) on the rear of the motor cover (2) followed by the three bolts (3) on the front.

Carefully lift the cover off of the frame, being cautious not to pinch or damage the pressure gauge hose under the motor cover.

Removing Hose Cover

⚠	**DANGER:** *Shut down power from the loader before removing the hose cover. Failure to do so could result in serious injury or death.*

Remove the motor cover. Refer to “Removing Motor Cover” on this page for instructions.

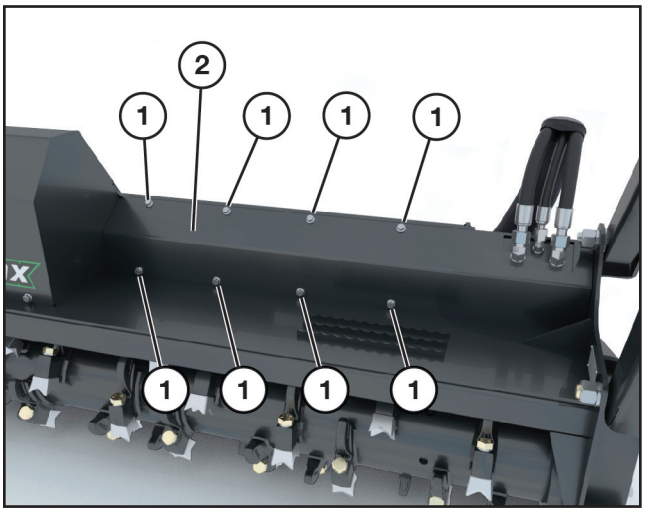

Remove the eight bolts (1) securing the hose cover (2) and lift the cover from the machine.

When maintenance/repairs are complete, return the covers to their original positions by reversing the procedures above. Be sure to tighten and secure all bolts.

Skid Removal/Replacement

⚠	**WARNING:** *Shut down and lock out power from the loader before removing skids. Failure to do so could result in serious injury or death.*

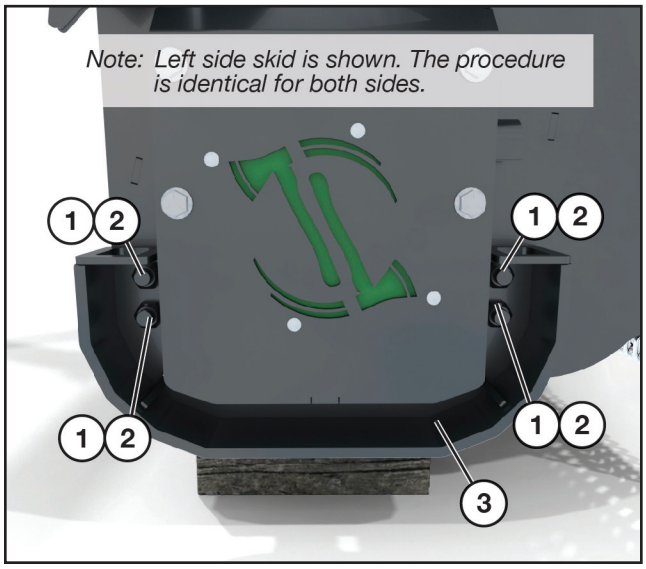

Lift the Battle Ax Light off of the ground about 6 in. Place blocks under the rotor (not under teeth) to support the Battle Ax Light when lowered. Do not place blocks under the skids.

Remove nuts (1) and slide carriage bolts (2) out of the frame. Lower the skid (3) and remove.

To install a new or repaired skid, align holes in skid with holes on frame. Reinstall the bolts, add the nuts and tighten securely against the skid.

Belt Adjustment

⚠	**WARNING:** *Shut down and lock out power from the loader before adjusting the drive belt. Failure to do so could result in serious injury or death.*

Remove the belt cover and motor cover. Refer to “Removing Belt Cover” on page 25, and “Removing Motor Cover” on page 26 for instructions.

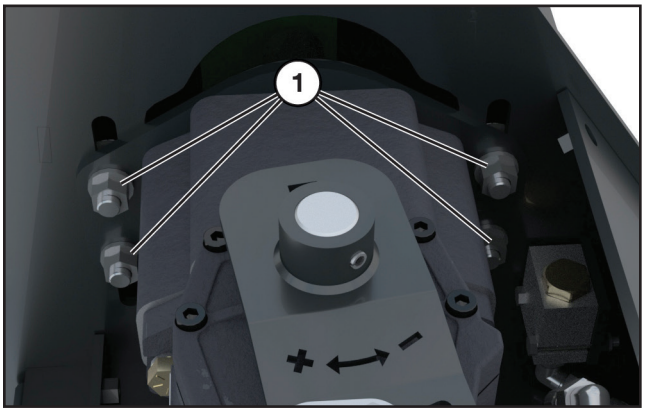

Loosen the four overhung load adapter support nuts (1) on the motor mount bracket.

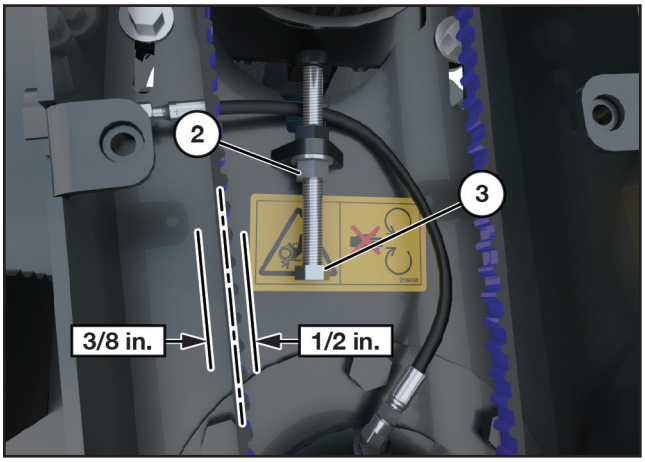

Loosen the jam nut (2). Then turn the hex bolt (3) to either increase or decrease belt tension.

The belt should move no more than 1/2 in. (12.7 mm) to the right, and no more than 3/8 in. (9.53 mm) to the left when pressure is applied at the midpoint.

Retighten the jam nut (2).

Retighten the overhung load adapter support bolts.

Tooth Removal and Installation

⚠	**DANGER:** *Shut down and lock out power from the loader before removing teeth. Failure to do so could result in serious injury or death.*

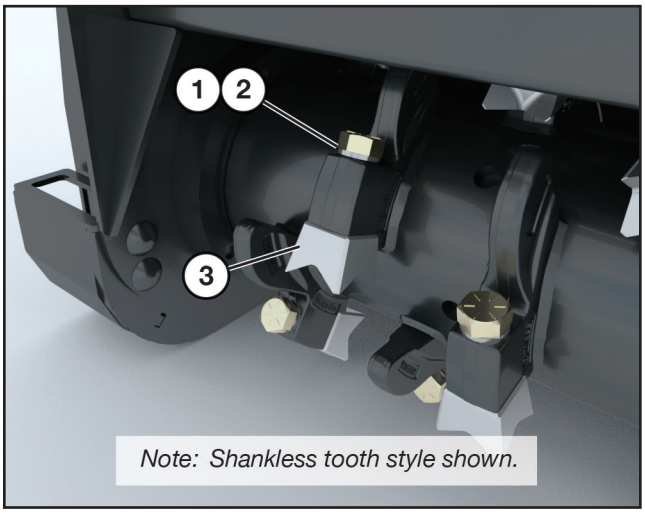

Note: Shankless tooth style shown.

Remove the bolt (1), washer (2), and tooth (3).

Use copper-based anti-seize when reinstalling the bolts. Torque to 200 ft.-lb.

IMPORTANT: *When a damaged tooth is replaced, the tooth directly opposite (180 degrees) must be replaced at the same time to retain balance.*

Tooth Sharpening

NOTE: *The teeth need to be kept sharp to maintain the most effective operation of the attachment. Daily inspection and touch-up is recommended.*

NOTE: *The teeth can either be removed from the attachment or remain installed for sharpening.*

⚠	**WARNING:** *The rotor must be stabilized to prevent accidental rotation any time the rotor is exposed for service work.*

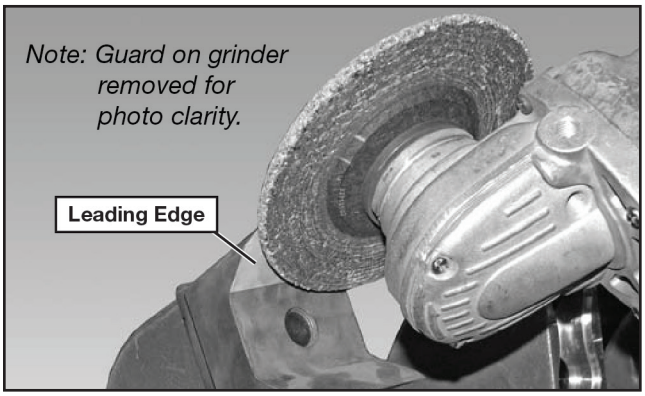

Note: Guard on grinder removed for photo clarity.

NOTE: *The cutter teeth have been heat treated to a specific hardness. Care must be taken to avoid overheating the leading edge of the tooth while sharpening. If the coloring in the tooth changes to either blue or brown during the sharpening, you have removed the temper and the tooth will not hold its cutting edge.*

NOTE: *When re-sharpening teeth using machine shop equipment, avoid overheating the teeth by using a flood coolant system.*

NOTE: *When re-sharpening teeth using a hand grinder, avoid overheating the tooth by lightly grinding each tooth, moving across the entire row of teeth before returning to the first tooth to repeat the procedure.*

NOTE: *Sharpen each tooth equally to maintain rotor balance. Always return the tooth to its original location if it is removed from the rotor for sharpening.*

(Procedure continued on following page.)

Tooth Sharpening (Cont'd)

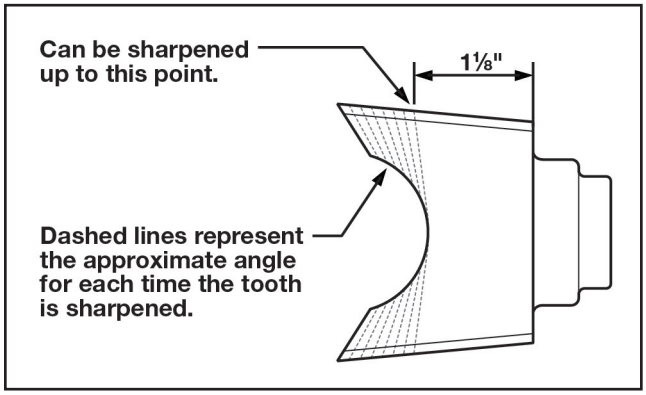

NOTE: *It is not necessary to match the factory angle on the underside of the cutting edge when re-sharpening. Sharpen each tooth at a slight angle for each successive sharpening (represented by the dashed lines shown in the illustration above). When the cutting edge of the tooth is 1-1/8 in. from the back side of the tooth, the tooth must be replaced.*

Storage

End of Season

- Clean the entire Battle Ax Light thoroughly.
- Clean belt and sheaves, relax the belt tension. See "Belt Adjustment" on page 27.
- Lubricate all parts of the machine. See "Lubrication" on page 23.
- Make a list of all worn or damaged parts and replace them.
- Paint all parts that are worn or rusted.
- Store the Battle Ax Light in a clean, dry area.
- Secure hoses on machine to avoid damage.
- Review the Battle Ax Light operator's manual.

Beginning of the Season

- Review the Battle Ax Light operator's manual.
- Lubricate all parts of the machine. See "Lubrication" on page 23.
- Tighten all bolts, nuts, and set screws. See "Torque Specifications" on page 55.
- Adjust belt tension. See "Belt Adjustment" on page 27.
- Replace all damaged, worn, or missing decals.
- Install the Battle Ax Light on a loader and test for proper operation.

⚠	**WARNING:** *DO NOT allow any people or animals within 300 feet of the work area while operating this machine.*

Troubleshooting

PROBLEM	CAUSE	SOLUTION
Excessive Vibration	Broken or missing teeth.	Replace teeth.
	Mud and/or debris wrapped around the rotor.	Clean the Battle Ax Light.
	Faulty drive line bearing.	Replace bearing(s).
	Faulty rotor bearing.	Replace bearing(s).
	Damage to rotor (including bent shaft ends, missing balance weights, or actual rotor deformation from striking rocks, etc.).	Consult factory.
Uneven Cutting	Teeth dull or excessively worn.	Replace teeth.
	Engine RPM too low.	Adjust machine RPM to full throttle.
	Travel speed too high.	Reduce ground speed.
Rotor Will Not Turn	Faulty drive line bearing.	Replace bearing(s).
	Faulty rotor bearing.	Replace bearing(s).
	Belt damaged.	Replace belt.
	Belt slipping.	Clean or replace the belt.
		Adjust belt tension.

PARTS IDENTIFICATION

Covers; Jack Stand

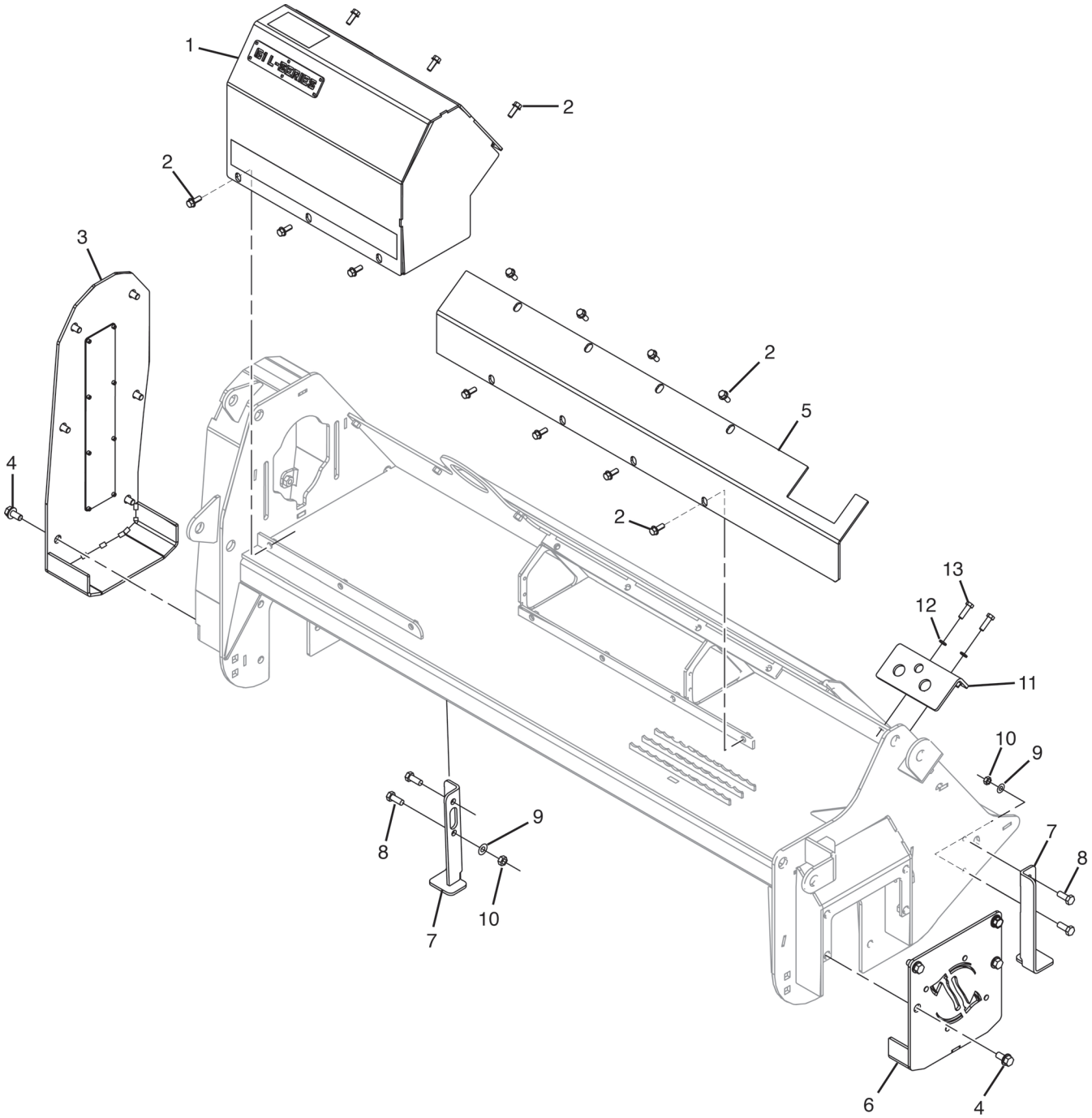

Covers; Jack Stand

#	QTY.	PART #	DESCRIPTION
1	1	218379	MOTOR COVER ASSEM
2	14	N26743	BOLT, 3/8" X 1" SER FLG
3	1	218279	COVER, WITH BACKER BSL
4	10	N26748	BOLT, 1/2" X 1" SER FLG
5	1	218377	61" HOSE COVER ASSEM
6	1	218268	COVER, NON DRIVE BSL
7	2	207849	STAND, SHIPPING W/ DECAL
8	4	4012	BOLT, 1/2" X 1-1/4" GRADE 5
9	2	4068	WASHER, 1/2" SAE FLAT
10	2	4054	NUT, LOCK 1/2" TOP
11	1	206411	MOUNT, BULKHEAD
12	2	N16470	WASHER, 3/8 NORDLOCK
13	2	4005	BOLT, 3/8" X 1-1/4" GRADE 5

Rotor, Skid Shoes

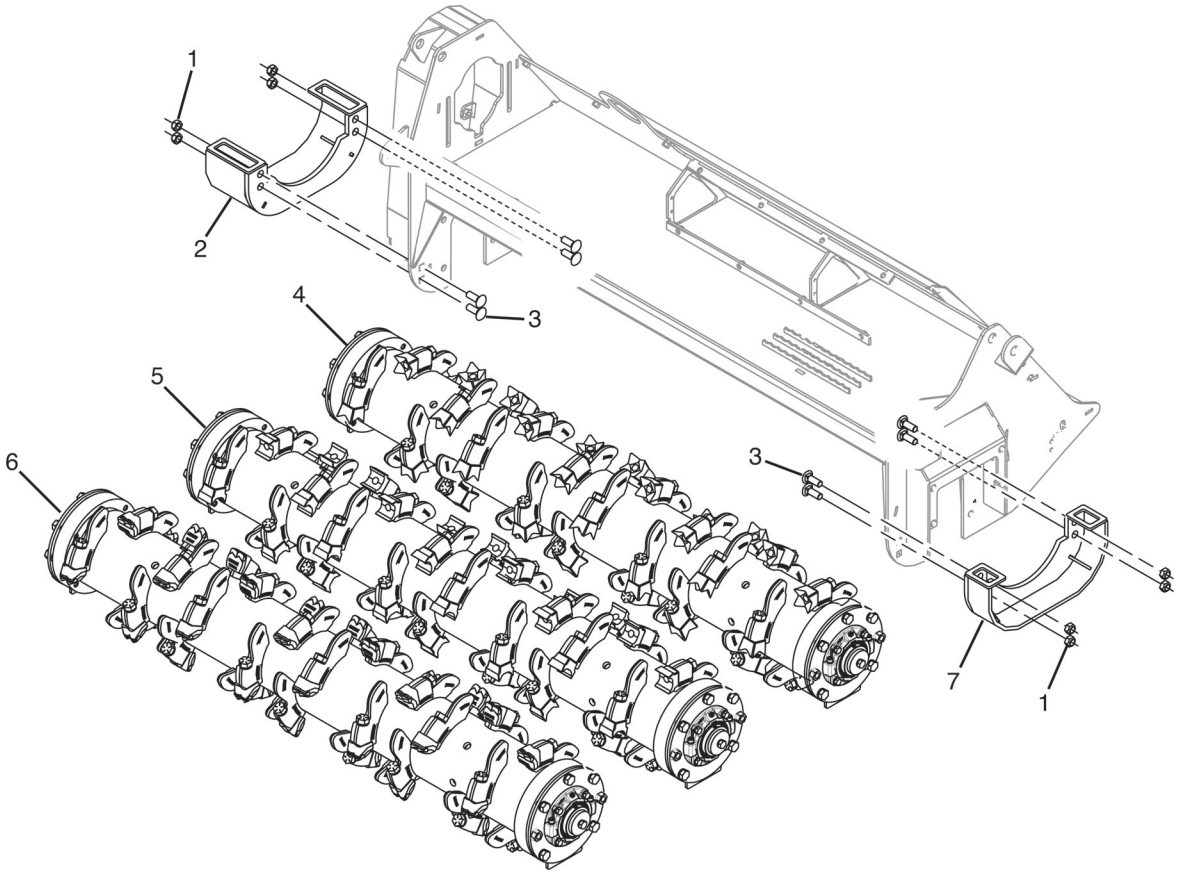

Item 4 - Rotor Assembly, with Shankless Teeth - see page 42.
Item 5 - Rotor Assembly, with Planer Teeth - see page 44.
Item 6 - Rotor Assembly, with Double Carbide Teeth - see page 46.

#	QTY.	PART #	DESCRIPTION
1	8	4055	NUT, LOCK 5/8" TOP
2	1	203201	BA SKID LIGHT RH SKID SHOE
3	8	4383	BOLT CARRIAGE, 5/8" X 1-3/4"
4	1	203252	ROTOR, 61" BATTLE AX W/SHANKLESS ASSEM
5	1	203532	ROTOR, 61" BATTLE AX W/PLANER ASSEM
6	1	209553	ROTOR, 61" BATTLE AX W/CARBIDE ASSEM
7	1	203217	BA SKID LIGHT LH SKID SHOE

Cutter Bar, Deflector Chains

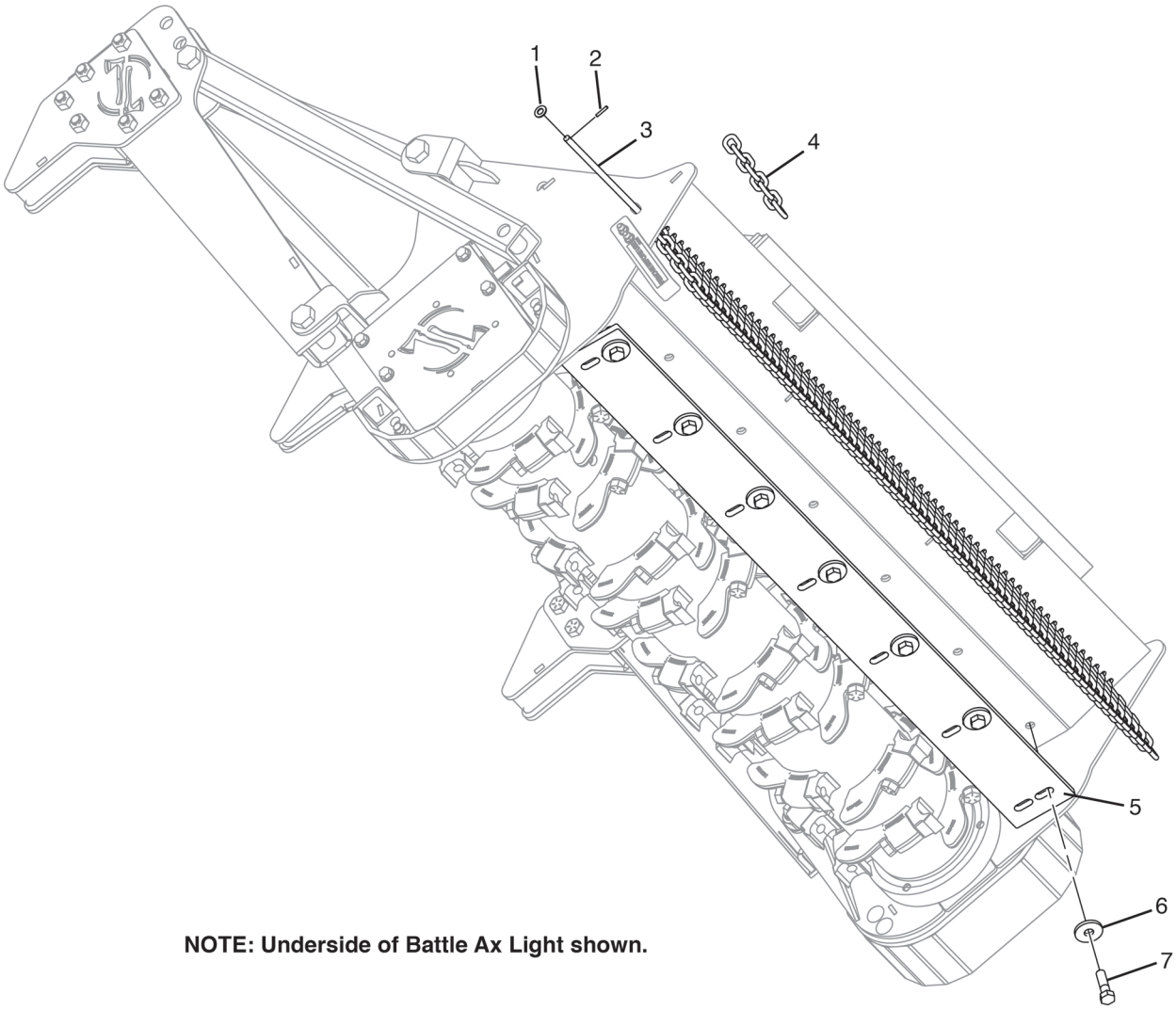

NOTE: Underside of Battle Ax Light shown.

#	QTY.	PART #	DESCRIPTION
1	2	4301	WASHER, 7/16" FLAT
2	2	4375	PIN, ROLL 3/16" X 1"
3	1	N49076	ROD, CARBIDE 61" CHAIN
4	66	N15589	CHAIN, CARBIDE AX REAT
5	1	N49075	PLATE, RECUTTER 61"
6	7	208800	WASHER, 2.000D X .688ID X .25T
7	7	4494	BOLT,5/8-18 X 2-1/4 GR 8

Pusher Bar

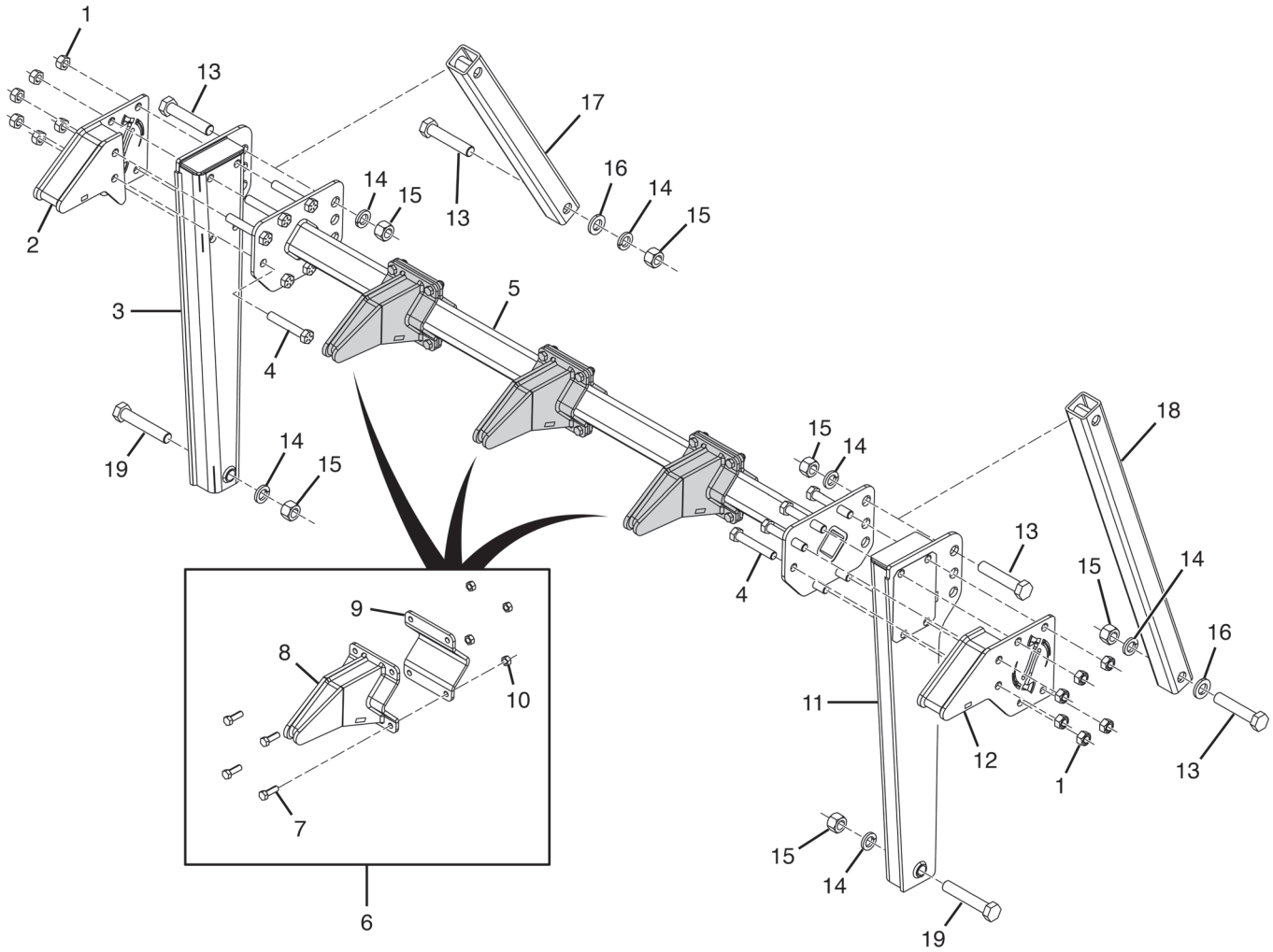

Items 1 thru 12 are part of the Pusher Assembly - Loftness part number 218394.

Pusher Bar

#	QTY.	PART #	DESCRIPTION
1	12	N16352	NUT, LOCK 3/4" GRADE 8 FINE
2	1	218397	PULLER, RIGHT
3	1	218399	ARM, RIGHT PUSHER W/DECAL
4	12	218226	BOLT, 3/4" X 4-1/2" FN TH GR 8
5	1	218363	TUBE, PUSHER CENTER W/DECAL
6	3	218395	PULLER, MOVEABLE
7*	4	4435	BOLT, 1/2IN X 1-1/2IN GR 8 FN TH
8*	1	218400	PULLER, WELDMENT
9*	1	218405	PLATE, PULLER
10*	4	4436	NUT, 1/2” LOCK FN TD GRADE 8
11	1	218398	ARM, PUSHER LEFT W/DECAL
12	1	218396	PULLER, LEFT
13	4	N17023	BOLT, 1-14 X 5" GR. 8 FN. THR
14	6	4166	WASHER, 1" LOCK
15	6	4490	NUT, 1"-14UNF STANDARD
16	2	N24249	WASHER, 1.06 X 1.88 X .25 THK
17	1	203237	TUBE, PUSHER 25.8" W/ BUSHING
18	1	203236	TUBE, PUSHER 37.5" W/ BUSHING
19	2	218225	BOLT, 1 X 5.5" FN TH GR 8

*** Quantities listed for items 7-10 are for one Moveable Puller assembly.**

Motor Mount

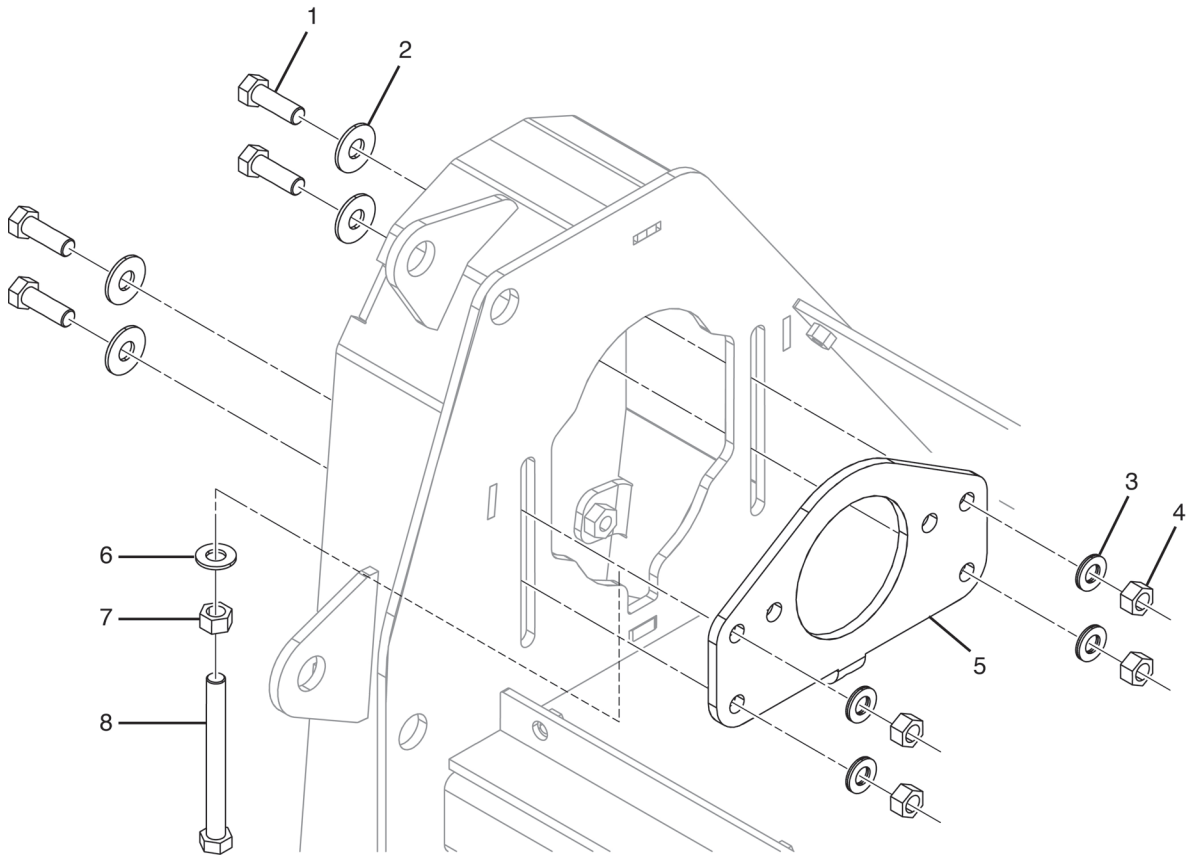

#	QTY.	PART #	DESCRIPTION
1	4	4435	BOLT, 1/2" X 1-1/2" FN TD GR 8
2	4	4486	WASHER, 1/2" FLAT
3	4	N37780	WASHER, NORD-LOCK 1/2" SP
4	4	4503	NUT, STANDARD 1/2" FN THD GR 8
5	1	203168	MOTOR MOUNT WLDMT
6	1	4068	WASHER, 1/2" SAE FLAT
7	1	4250	NUT, STANDARD 1/2
8	1	N27483	BOLT, 1/2" X 5" GR 5 FL TH

Gauge, Pressure

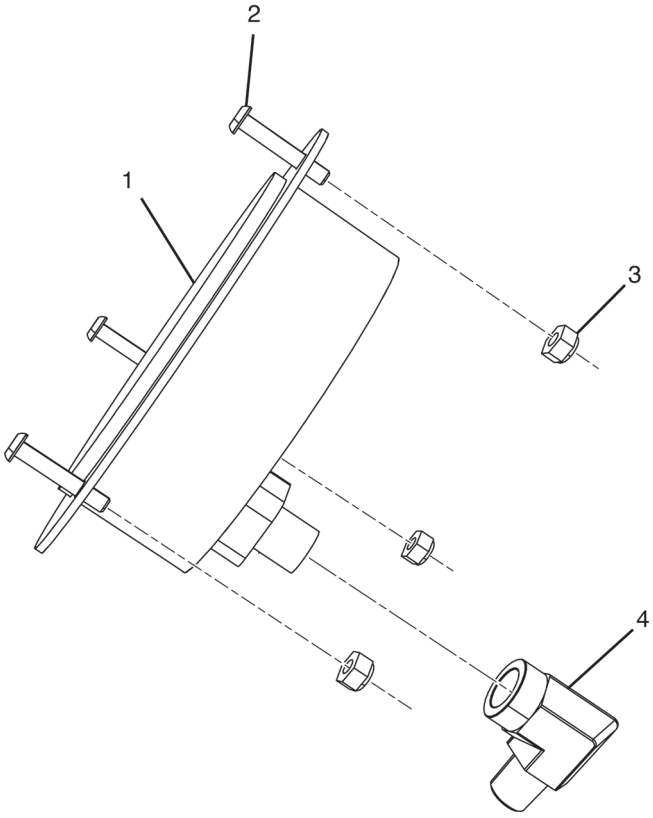

#	QTY.	PART #	DESCRIPTION
1	1	205041	GAUGE, 0-6000 PSI 4IN PRESS
2	3	4575	BOLT, BHCS #8-32 X 3/4
3	3	N16133	NUT, NYLON INSERT #8
4	1	N16162	ELBOW, 1/4" BLK 90 DEG STREET

Lubrication

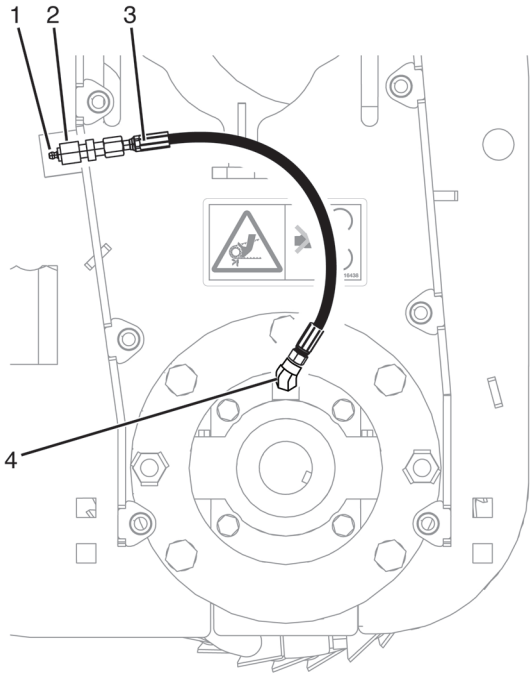

Right side rotor bearing lubrication.

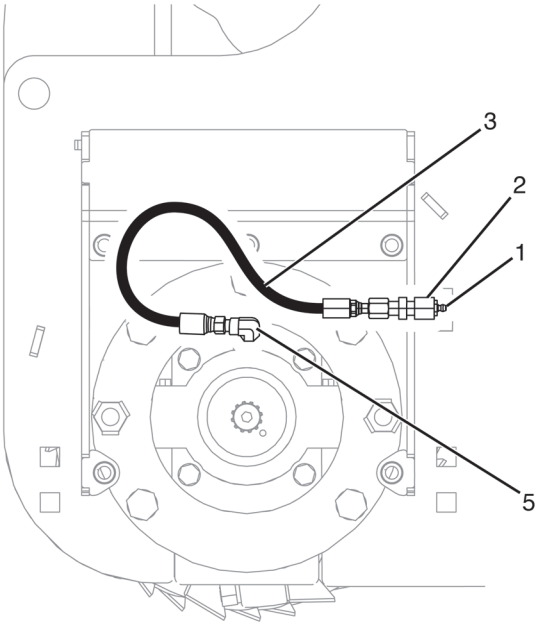

Left side rotor bearing lubrication.

#	QTY.	PART #	DESCRIPTION
1	2	N17007	GREASE ZERK, 1/8" NPT
2	2	4304-10	BULKHEAD, FITTING-GREASE HOSE
3	2	4304	HOSE, GREASE 1/8" X 15"
4	1	4471	ELBOW, 1/8" 45 DEG.STREET
5	1	4472	ELBOW, 1/8" BLK 90 DEG STREET

Belt and Sheave Assembly, 33 Top 33 Bottom “H” (208556)

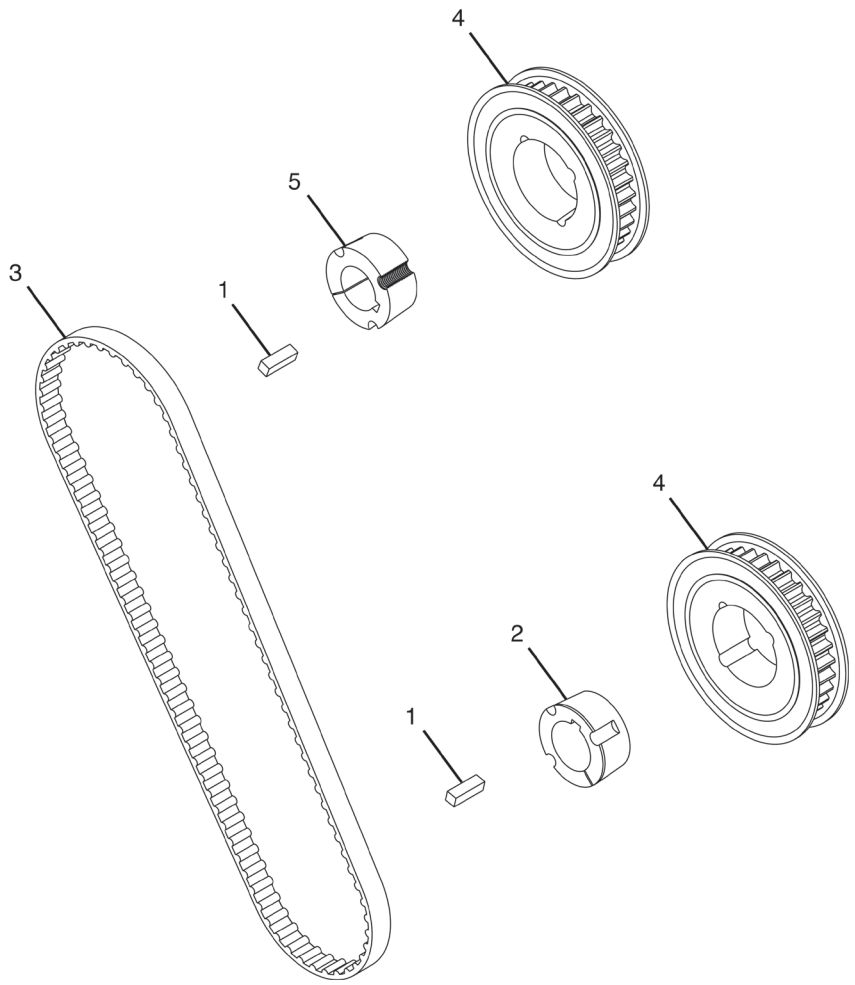

#	QTY.	PART #	DESCRIPTION
1	2	201070	KEY, 3/8" X 1-1/4"
2	1	208551	BUSHING, 1-3/4 TPL 2012
3	1	208552	BELT, POLY CHAIN 14MM 1260 X 20
4	2	N49224	SPROCKET, 14MM 33 TOOTH 20
5	1	N49228	BUSHING, 1-1/2" TPL 2012

Rotor Assembly with Shankless Tooth (203252)

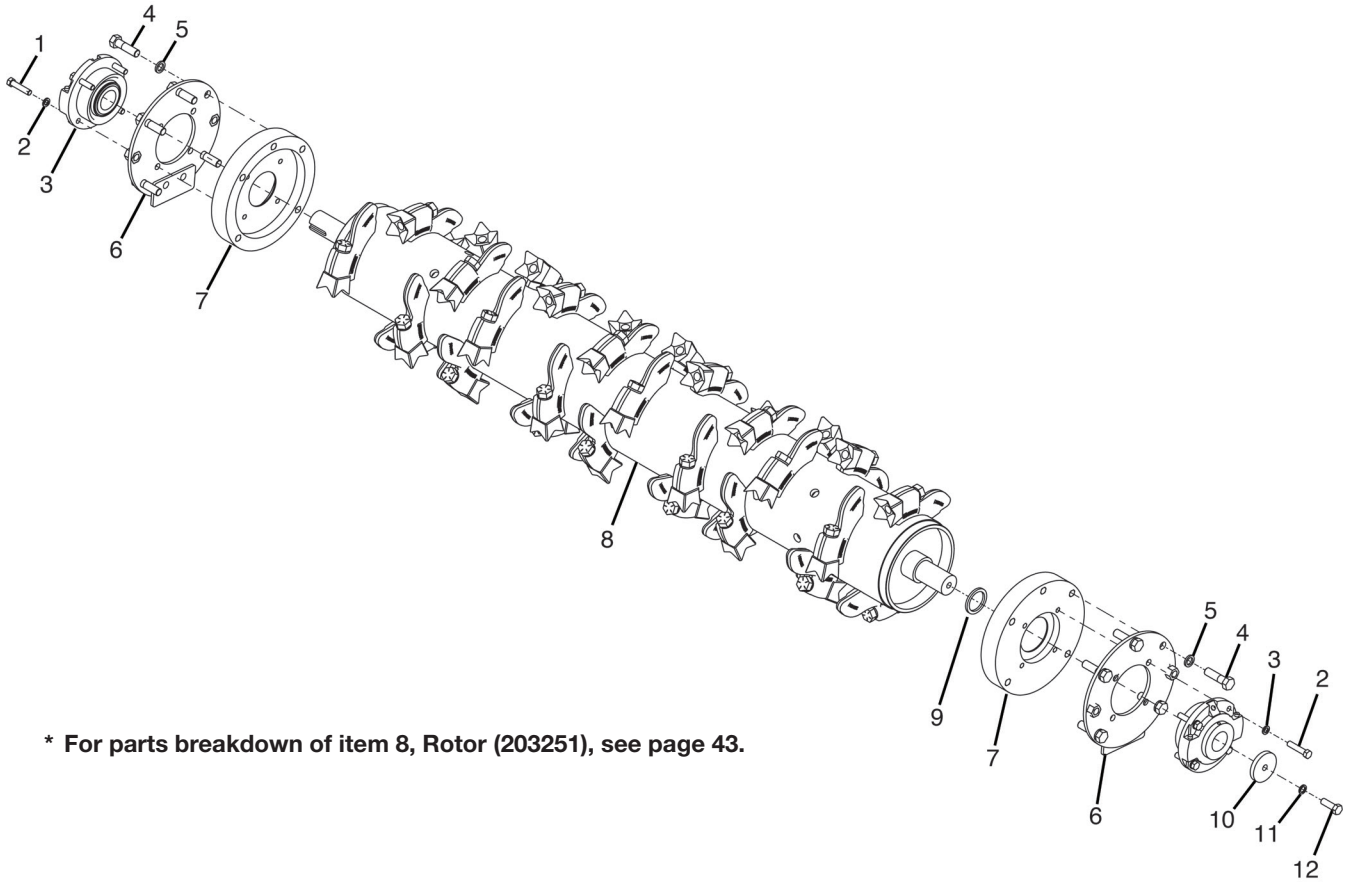

*** For parts breakdown of item 8, Rotor (203251), see page 43.**

#	QTY.	PART #	DESCRIPTION
1	8	201358	BOLT, 7/16" X 2" GR 8 FN TH
2	8	N16471	WASHER, 7/16 NORDLOCK
3	2	214327	BEARING, 1-3/4" PILOT ROLLER
4	10	4494	BOLT, 5/8-18 X 2-1/4 GR 8
5	10	N16473	WASHER, 5/8 NORDLOCK
6	2	203132	MOUNT, BEARING WELDMENT
7	2	201357	ANTIWRAP, 1 PIECE CARBIDE 8"
8	1	203251	ROTOR, 61" BATTLE AX W/SHANKLESS TOOTH
9	1	201359	BUSHING, 1-3/4"ID X 2-1/4"OD
10	1	209547	PLATE, BEARING RET. 2.625 OD
11	1	N16472	WASHER, NORD-LOCK 1/2IN
12	1	4435	BOLT, 1/2IN X 1-1/2IN GR 8 FN TH

Rotor with Shankless Tooth (203251)

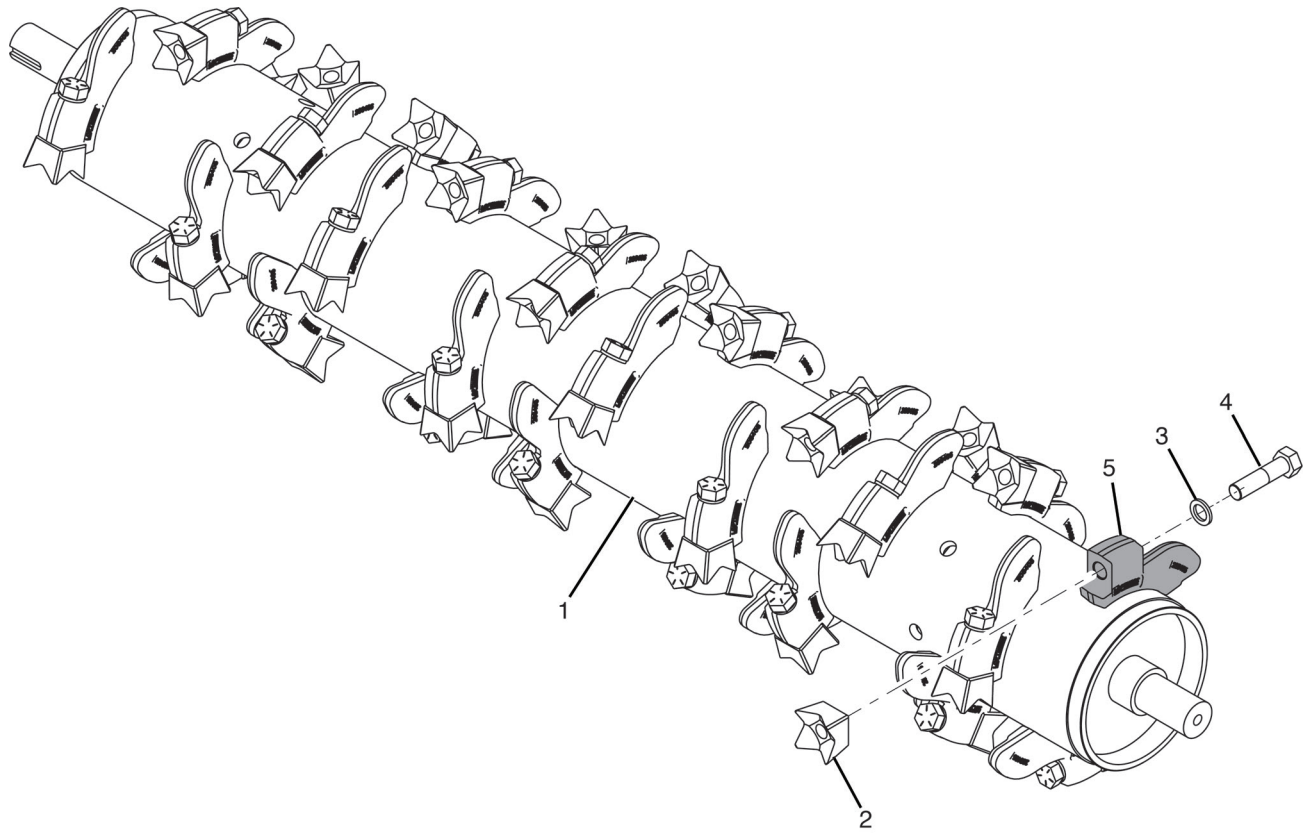

#	QTY.	PART #	DESCRIPTION
1	1	203250	ROTOR, 61" BA SPIRAL W/O CUTTER 8"
2	38	N156042	TOOTH, SHANKLESS
3	38	N16474	WASHER, 3/4 NORDLOCK
4	38	N21308	BOLT, 3/4" X 3" FN THRD GR 8
5	38	206405	MOUNT, BATTLEAX LIGHT

Rotor Assembly with Planer Teeth (203532)

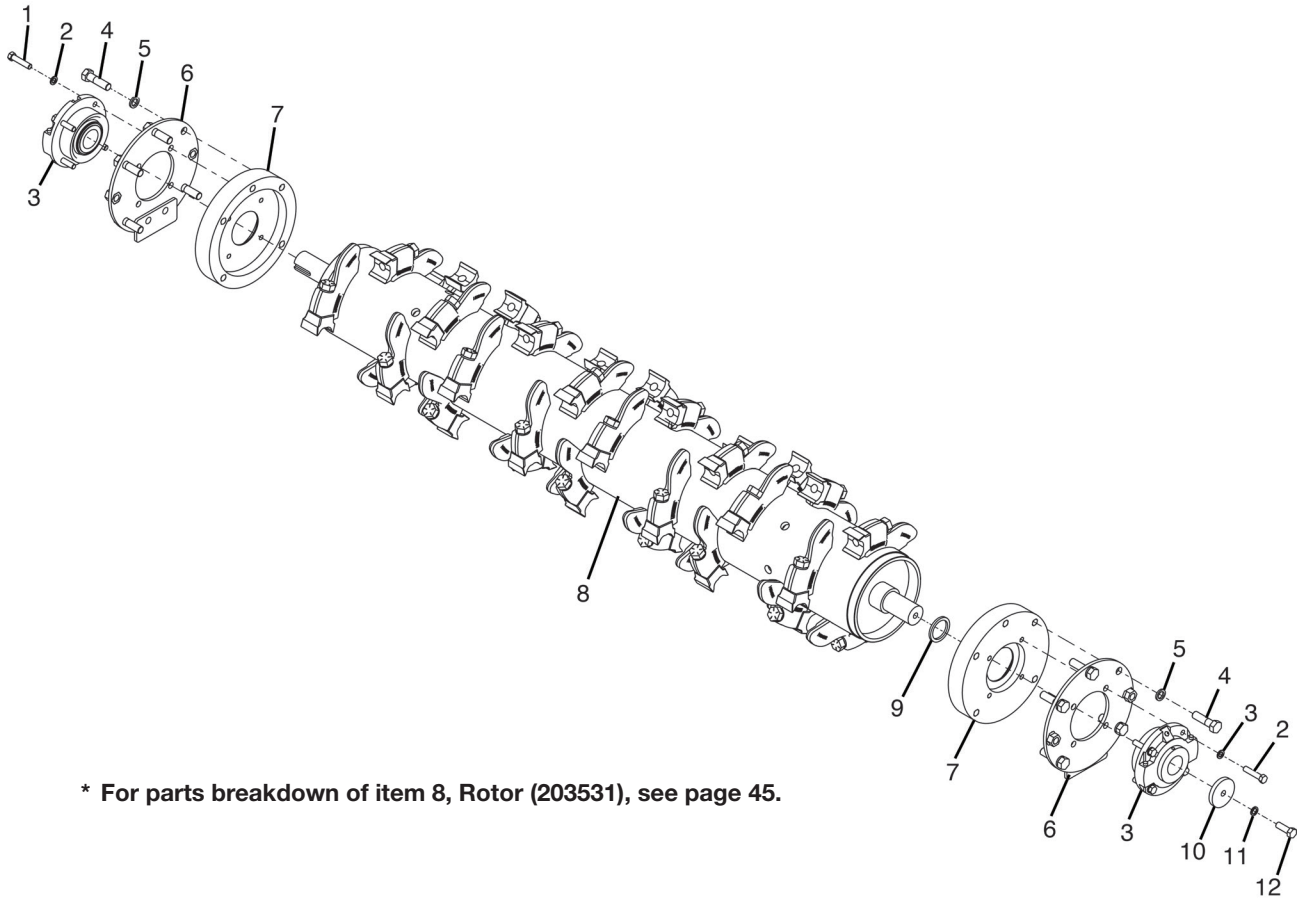

*** For parts breakdown of item 8, Rotor (203531), see page 45.**

#	QTY.	PART #	DESCRIPTION
1	8	201358	BOLT, 7/16" X 2" GR 8 FN TH
2	8	N16471	WASHER, 7/16 NORDLOCK
3	2	214327	BEARING, 1-3/4" PILOT ROLLER
4	10	4494	BOLT, 5/8-18 X 2-1/4 GR 8
5	10	N16473	WASHER, 5/8 NORDLOCK
6	2	203132	MOUNT, BEARING WELDMENT
7	2	201357	ANTIWRAP, 1 PIECE CARBIDE 8"
8	1	203531	ROTOR, 61" BATTLE AX W/PLANER TOOTH
9	1	201359	BUSHING, 1-3/4"ID X 2-1/4"OD
10	1	209547	PLATE, BEARING RET. 2.625 OD
11	1	N16472	WASHER, NORD-LOCK 1/2IN
12	1	4435	BOLT, 1/2IN X 1-1/2IN GR 8 FN TH

Rotor with Planer Teeth (203531)

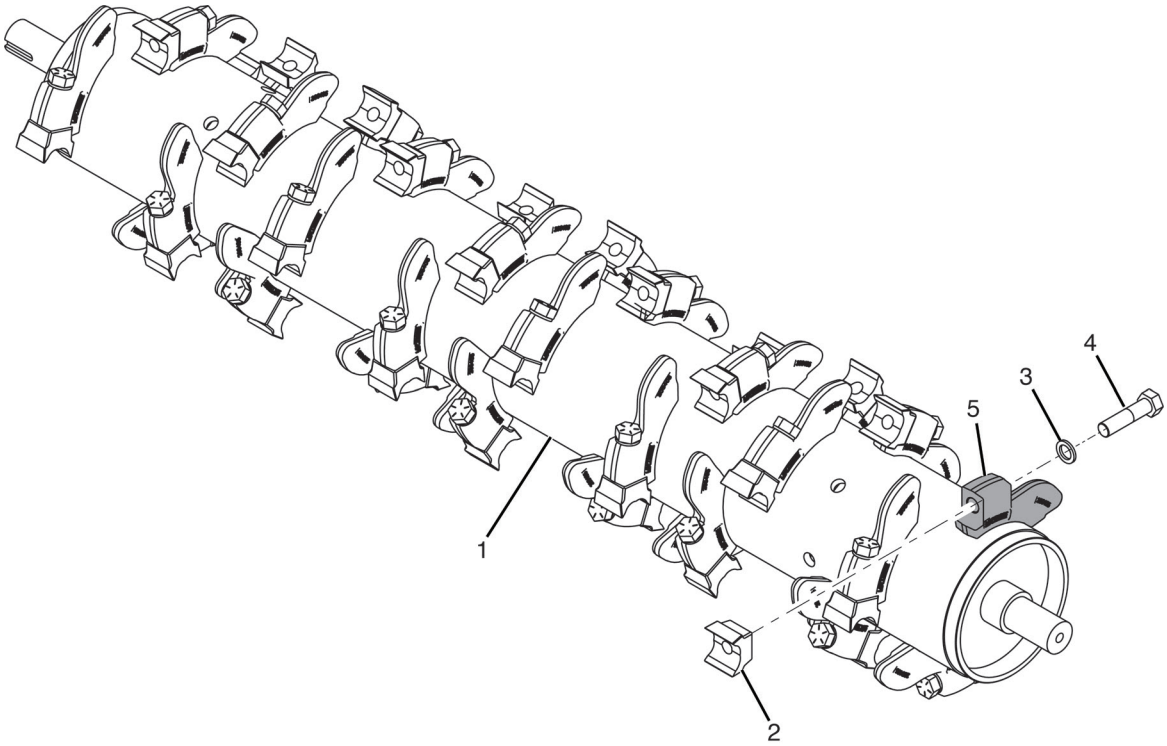

#	QTY.	PART #	DESCRIPTION
1	1	203250	ROTOR, 61" BA SPIRAL W/O CUTTER 8"
2	38	202970	TOOTH, QUADCO PLANER W/MOD TIP
3	38	N16474	WASHER, 3/4 NORDLOCK
4	38	N21308	BOLT, 3/4" X 3" FN THRD GR 8
5	38	206405	MOUNT, BATTLEAX LIGHT

Rotor Assembly with Double Carbide Teeth (209553)

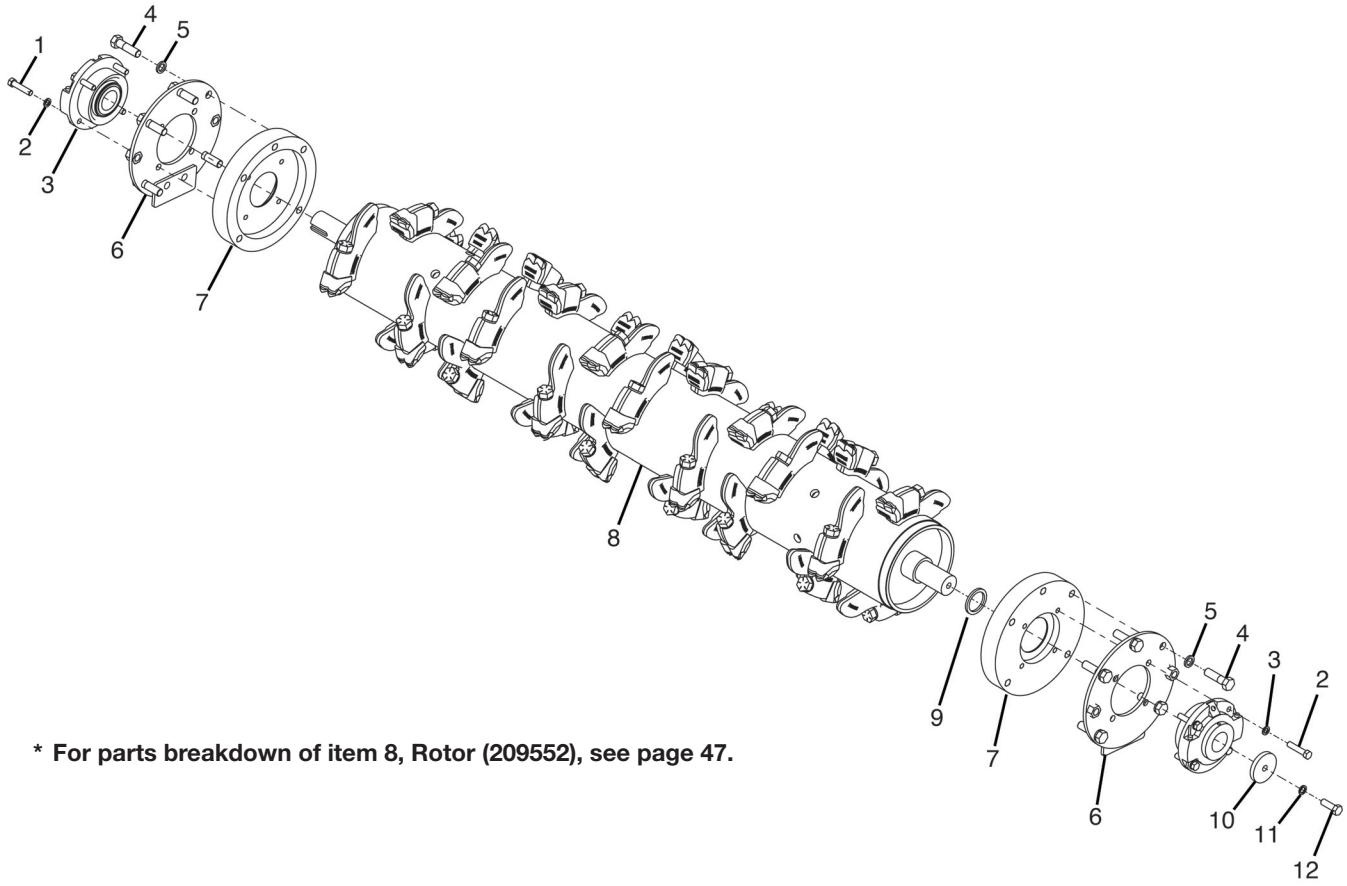

*** For parts breakdown of item 8, Rotor (209552), see page 47.**

#	QTY.	PART #	DESCRIPTION
1	8	201358	BOLT, 7/16" X 2" GR 8 FN TH
2	8	N16471	WASHER, 7/16 NORDLOCK
3	2	214327	BEARING, 1-3/4" PILOT ROLLER
4	10	4494	BOLT, 5/8-18 X 2-1/4 GR 8
5	10	N16473	WASHER, 5/8 NORDLOCK
6	2	203132	MOUNT, BEARING WELDMENT
7	2	201357	ANTIWRAP, 1 PIECE CARBIDE 8"
8	1	209552	ROTOR, 61" BATTLE AX W/CARBIDE TOOTH
9	1	201359	BUSHING, 1-3/4"ID X 2-1/4"OD
10	1	209547	PLATE, BEARING RET. 2.625 OD
11	1	N16472	WASHER, NORD-LOCK 1/2IN
12	1	4435	BOLT, 1/2IN X 1-1/2IN GR 8 FN TH

Rotor with Double Carbide Teeth (209552)

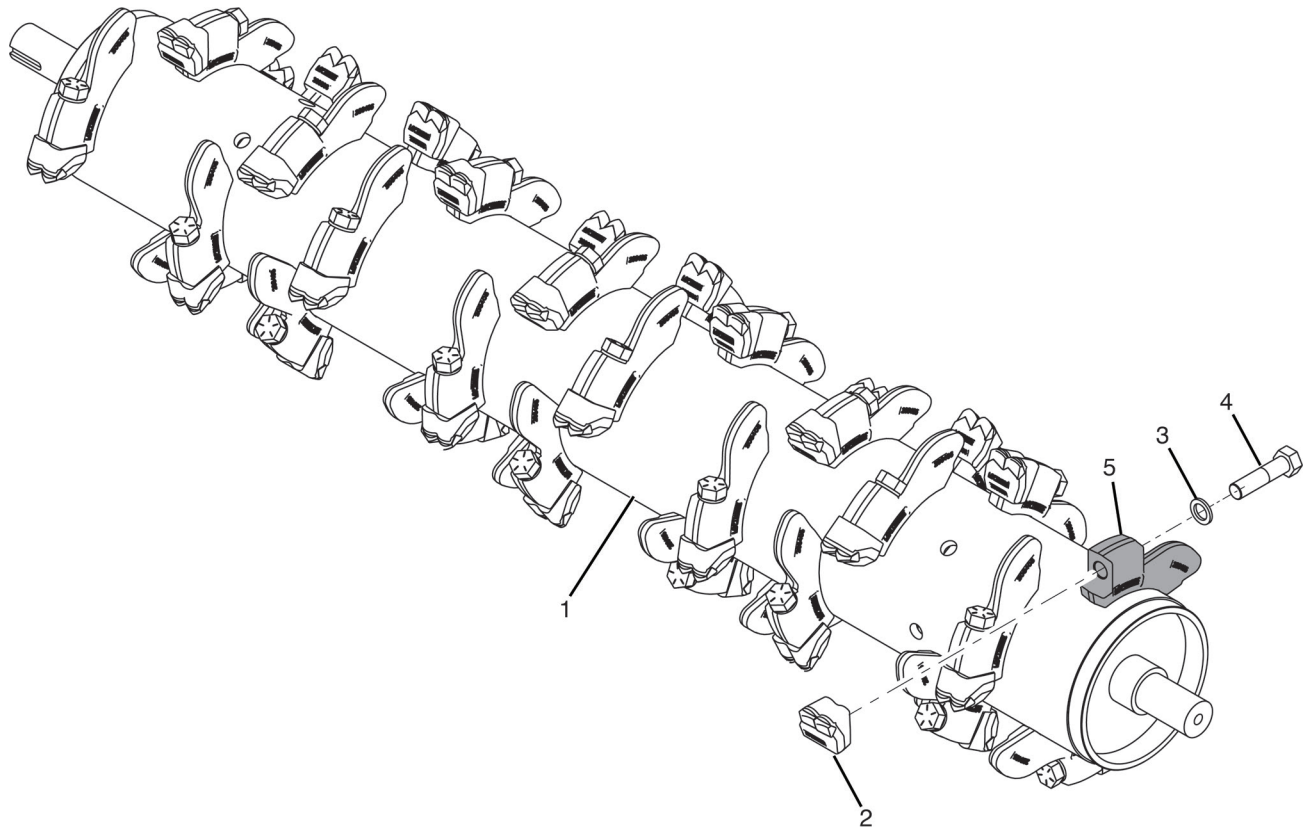

#	QTY.	PART #	DESCRIPTION
1	1	203250	ROTOR, 61" BA SPIRAL W/O CUTTER 8"
2	38	209036	TOOTH, CARBIDE
3	38	N16474	WASHER, 3/4 NORDLOCK
4	38	N21308	BOLT, 3/4" X 3" FN THRD GR 8
5	38	206405	MOUNT, BATTLEAX LIGHT

Motor Assembly (218375)

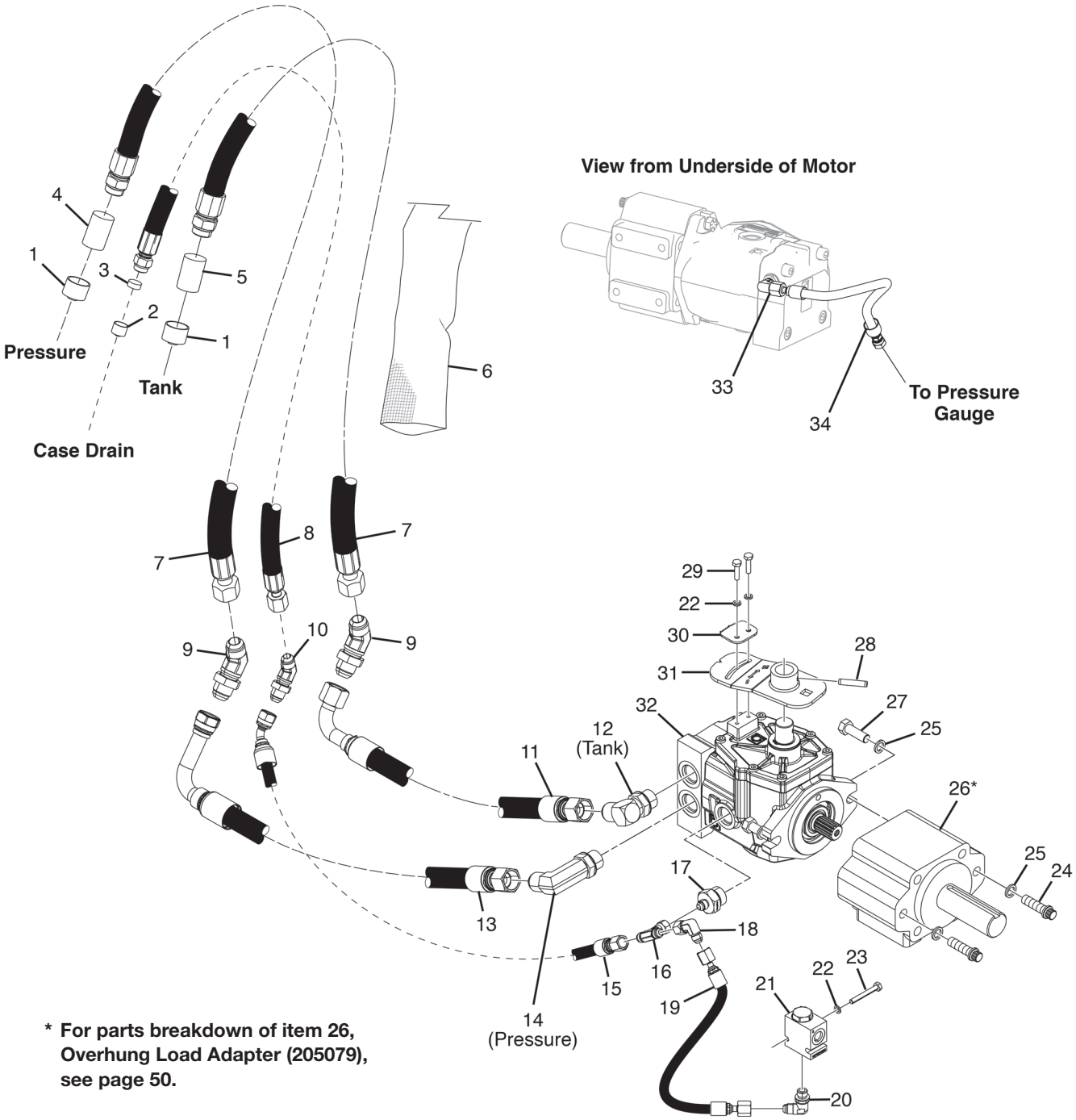

* For parts breakdown of item 26, Overhung Load Adapter (205079), see page 50.

Motor Assembly (218375)

#	QTY.	PART #	DESCRIPTION
1	2	N15893	CAP, 3/4 ALUMINUM HOSE
2	1	N15895	CAP, 1/2 ALUMINUM HOSE
3	1	N32002	PLUG, 3/8 SCH 40 X .25
4	1	N24822	DECAL, PRESSURE
5	1	N24823	DECAL, RETURN
6	1	203421	WRAP, HOSE 70"
7	2	203419	HOSE, 3/4" X 73" -12FJIC -12MOR
8	1	203569	HOSE, 1/2IN X 74IN 8FJIC - 8MOR
9	2	202975	ADAPTER, 45 BULKHEAD -12MJIC
10	1	200382	ADAPTER, 45 BULKHEAD -8MJIC
11	1	203639	HOSE, 3/4"X48.5"-12FJIC-90SH12FJIC
12	1	N11945	ELBOW, 90 DEG 12MOR - 12MJIC
13	1	209029	HOSE, 3/4 X 53.25-12FJIC-12FJIC90L
14	1	N21332	ELBOW, 90 DEG - 12MJIC - 12MOR
15	1	218390	HOSE, 3/8" X 55.5"-6FJIC-8FJIC45
16	1	N23832	TEE, 6MJIC - 6MJIC - 6FJX SWIVEL
17	1	N28825	ADAPTER, 6MJIC -12MOR
18	1	N29078	ELBOW, 90 DEG - 6MJIC - 6FJIC
19	1	N51110	HOSE, 1/4 X 13-06FJIX-06FJIX
20	1	N26204	ELBOW, 90 DEG - 6MJIC - 6MOR
21	1	205115	VALVE, RELIEF 200PSI
22	3	N16468	WASHER, 1/4 NORDLOCK
23	1	N16072	BOLT, 1/4" X 2" GR. 5 FULL THD
24	2	N31536	BOLT, 1/2 X 1-3/4 12 PT GRD8
25	4	N16472	WASHER, 1/2 NORDLOCK
26	1	205079	ADAPTER, OVERHUNG LOAD MOTOR #2
27	2	4466	BOLT, 1/2" X 1-1/2" GRADE 8
28	1	216446	PIN, ROLL 8MM X 40MM
29	2	4000	BOLT, 1/4" X 1" GRADE 5
30	1	216443	PLATE, INDICATOR
31	1	216440	ADJUSTER WLDMT
32	1	205090	MOTOR, BONDIOLI ADJ PISTON 32CC
33	1	N28907	ELBOW, 90DEG -6MJIC -4MOR
34	1	N155816	HOSE, 1/4 X 16 -4FPSW -6FJIC

Overhung Load Adapter (205079)

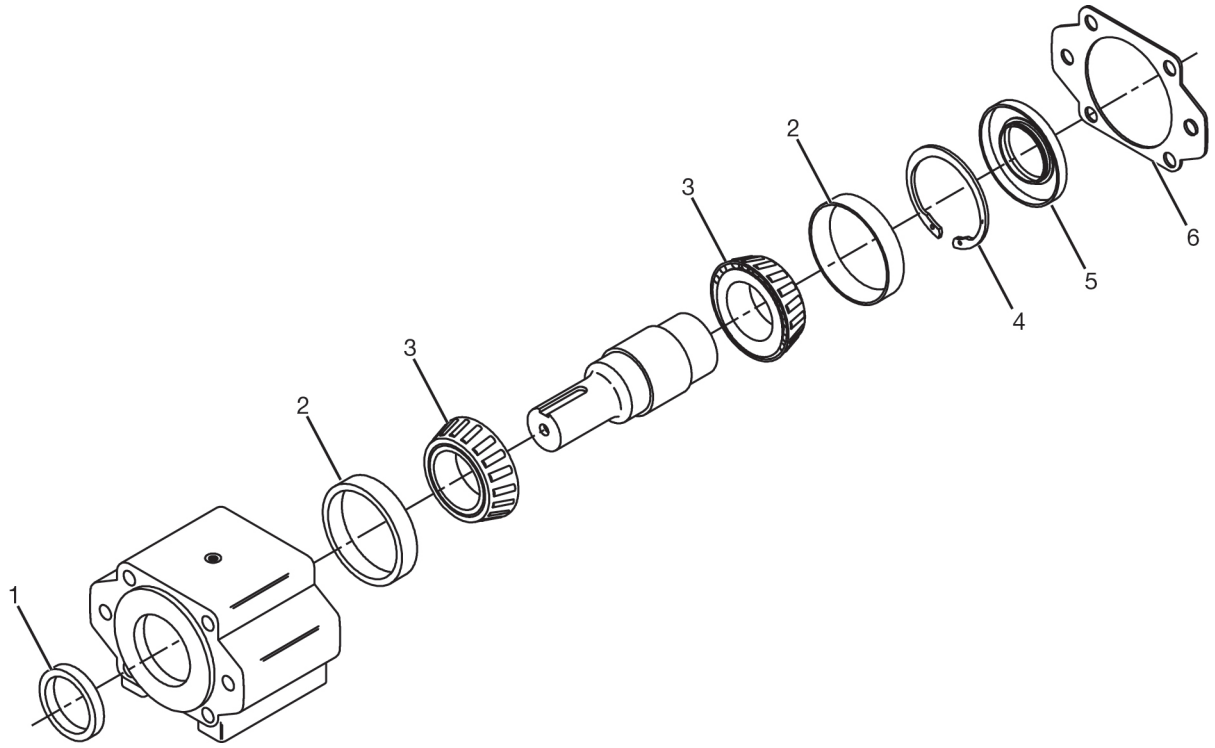

#	QTY.	PART #	DESCRIPTION
1	1	N14151	SEAL, FRONT (1.50" I.D. X 2.13" O.D. X .312" THK)
2	2	N14152	CUP, BEARING
3	2	N14153	CONE, BEARING
4	1	N14156	RING, RETAINING
5	1	N14157	SEAL, REAR (55MM X 90MM X 10MM)
6	1	N14158	GASKET

Right Hand Hose Kit (208093)

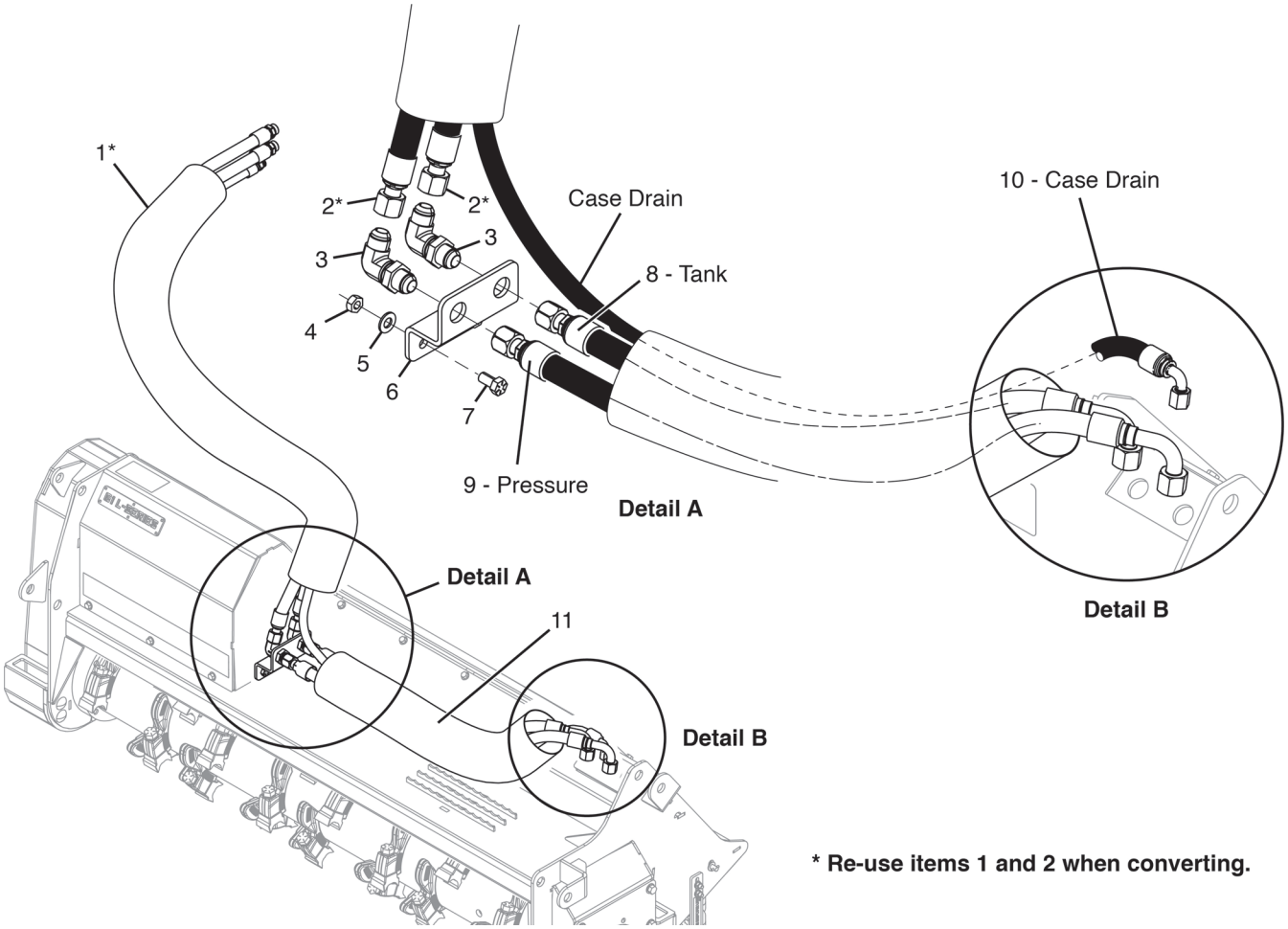

*** Re-use items 1 and 2 when converting.**

#	QTY.	PART #	DESCRIPTION
1	1	203421	WRAP, HOSE 76
2	2	203419	HOSE, 3/4 X 73 -12FJIC -12MORB
3	2	N34029	ADAPTER, 90 BULKHEAD -12MJIC
4	2	4054	NUT, LOCK 1/2" TOP
5	2	4068	WASHER, 1/2" SAE FLAT
6	1	207813	PLATE, BULKHEAD MOUNT 3/4
7	2	4465	BOLT, 1/2" X 1" GRADE 8
8	1	208095	HOSE, 3/4 X 37 -12FJIC -12FJIC90
9	1	208094	HOSE, 3/4 40 -12FJIC -12FJIC90
10	1	208096	HOSE, 1/2 113 -8FJIC90 -8MORB
11	1	N159526	WRAP, HOSE 45

Machine Decals and Signs

NOTE: *All safety related decals are also shown in the Safety Instructions Section along with their location on the machine. See "Safety Decals" - "Locations" on page 8.*

Check and replace any worn, torn, hard to read or missing decals on your machine.

Part No. 216436

Part No. 216437

Part No. 216438

Part No. 203264
(*For models operating in the State of California.*)

Part No. 207851

Part No. N13721

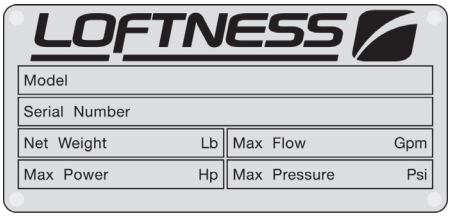

Part No. 209449

Part No. N28010

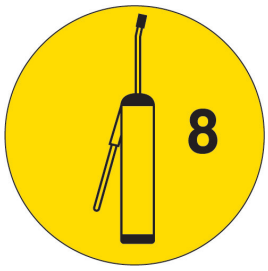

Part No. 217440

LOFTNESS

Part No. 218343

BATTLE AX

Specifications

DESCRIPTION	BATTLE AX LIGHT
Cutting Width	61 in. (154.9 cm)
Operating Capacity	6 in. (15.2 cm) Continuous
	8 in. (20.3 cm) Intermittent
Motor	Adjustable Axial Piston
Rotor Bearings	1.75 in. Piloted Double Taper
Rotor Tip Diameter	13.5 in. (34.3 cm)
Mount	Universal Skid Steer
Shear Bar	Adjustable
Knives	Double Carbide, Shankless, or Planer Teeth
Skid Shoes	Stationary
Deflector	Steel Chain
Anti-Wrap Protection	Bearing

Dimensions

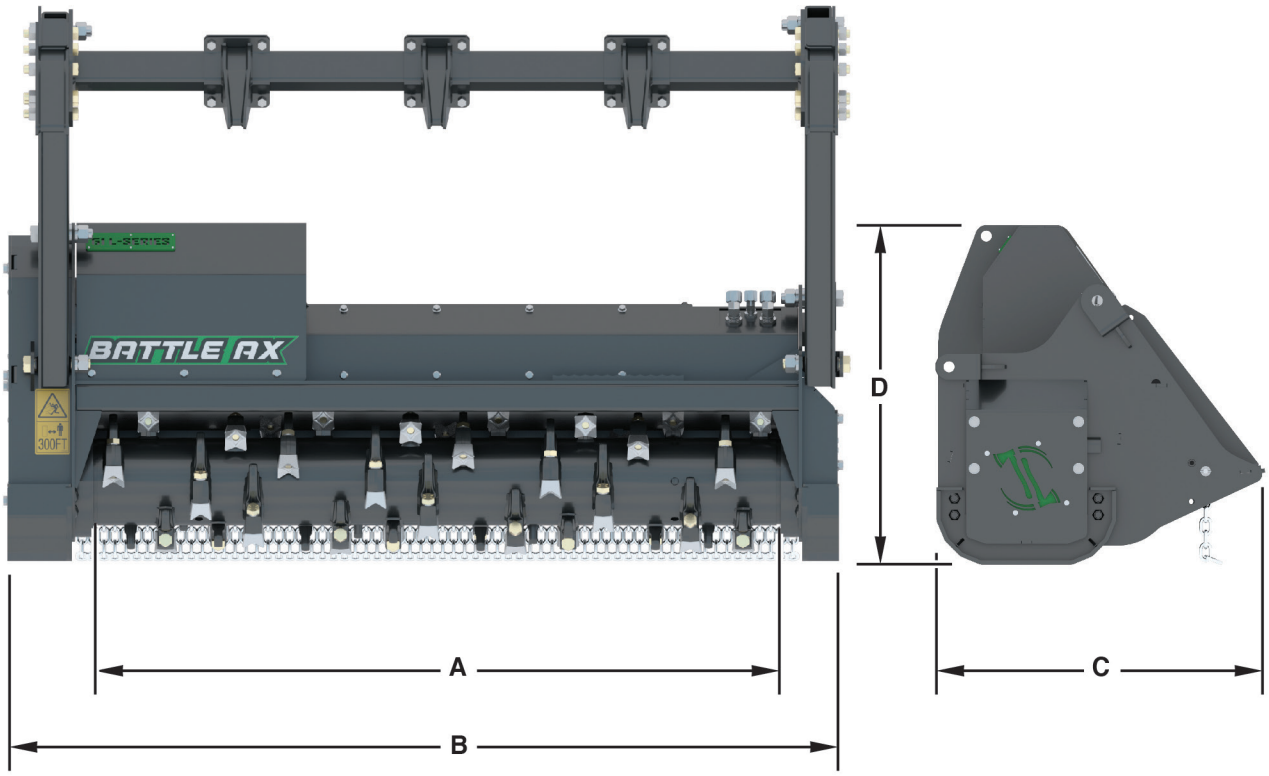

DESCRIPTION	BATTLE AX LIGHT
Cutting Path (A)	61 in. (154.9 cm)
Overall Width (B)	76.0 in. (193.0 cm)
Overall Depth (C) (without pusher)	30.0 in. (76.2 cm)
Overall Height (D) (without pusher)	30.875 in. (78.4 cm)
Number Of Teeth	38
Crated Weight (with pusher)	~1,606 lbs. (728.5 kg)

Torque Specifications

Inches Hardware and Lock Nuts

TORQUE CHARTS

Minimum Hardware Tightening Torques

Normal Assembly Applications
(Standard Hardware and Lock Nuts)

SAE Gr. 2	SAE Grade 5		SAE Grade 8		LOCK NUTS			
Nominal Size	**Unplated or Plated Silver**	**Plated W / ZnCr Gold**	**Unplated or Plated Silver**	**Plated W / ZnCr Gold**	**Unplated or Plated Silver**	**Plated W / ZnCr Gold**	**Grade W / Gr. 5 Bolt**	**Grade W / Gr. 8 Bolt**
1/4	55 in.-lb. (6.2 N•m)	72 in.-lb. (8.1 N•m)	86 in.-lb. (9.7 N•m)	112 in.-lb. (12.6 N•m)	121 in.-lb. (13.6 N•m)	157 in.-lb. (17.7 N•m)	61 in.-lb. (6.9 N•m)	86 in.-lb. (9.8 N•m)
5/16	115 in.-lb. (13 N•m)	149 in.-lb. (17 N•m)	178 in.-lb. (20 N•m)	229 in.-lb. (26 N•m)	250 in.-lb. (28 N•m)	324 in.-lb. (37 N•m)	125 in.-lb. (14 N•m)	176 in.-lb. (20 N•m)
3/8	17 ft.-lb. (23 N•m)	22 ft.-lb. (30 N•m)	26 ft.-lb. (35 N•m)	34 ft.-lb. (46 N•m)	37 ft.-lb. (50 N•m)	48 ft.-lb. (65 N•m)	19 ft.-lb. (26 N•m)	26 ft.-lb. (35 N•m)
7/16	27 ft.-lb. (37 N•m)	35 ft.-lb. (47 N•m)	42 ft.-lb. (57 N•m)	54 ft.-lb. (73 N•m)	59 ft.-lb. (80 N•m)	77 ft.-lb. (104 N•m)	30 ft.-lb. (41 N•m)	42 ft.-lb. (57 N•m)
1/2	42 ft.-lb. (57 N•m)	54 ft.-lb. (73 N•m)	64 ft.-lb. (87 N•m)	83 ft.-lb. (113 N•m)	91 ft.-lb. (123 N•m)	117 ft.-lb. (159 N•m)	45 ft.-lb. (61 N•m)	64 ft.-lb. (88 N•m)
9/16	60 ft.-lb. (81 N•m)	77 ft.-lb. (104 N•m)	92 ft.-lb. (125 N•m)	120 ft.-lb. (163 N•m)	130 ft.-lb. (176) N•m	169 ft.-lb. (229 N•m)	65 ft.-lb. (88 N•m)	92 ft.-lb. (125 N•m)
5/8	83 ft.-lb. (112 N•m)	107 ft.-lb. (145 N•m)	128 ft.-lb. (174 N•m)	165 ft.-lb. (224 N•m)	180 ft.-lb. (244) N•m	233 ft.-lb. (316 N•m)	90 ft.-lb. (122 N•m)	127 ft.-lb. (172 N•m)
3/4	146 ft.-lb. (198 N•m)	189 ft.-lb. (256 N•m)	226 ft.-lb. (306 N•m)	293 ft.-lb. (397 N•m)	319 ft.-lb. (432 N•m)	413 ft.-lb. (560 N•m)	160 ft.-lb. (217 N•m)	226 ft.-lb. (306 N•m)
7/8	142 ft.-lb. (193 N•m)	183 ft.-lb. (248 N•m)	365 ft.-lb. (495 N•m)	473 ft.-lb. (641 N•m)	515 ft.-lb. (698 N•m)	667 ft.-lb. (904 N•m)	258 ft.-lb. (350 N•m)	364 ft.-lb. (494 N•m)
1	213 ft.-lb. (289 N•m)	275 ft.-lb. (373 N•m)	547 ft.-lb. (742 N•m)	708 ft.-lb. (960 N•m)	773 ft.-lb. (1048 N•m)	1000 ft.-lb. (1356 N•m)	386 ft.-lb. (523 N•m)	545 ft.-lb. (739 N•m)

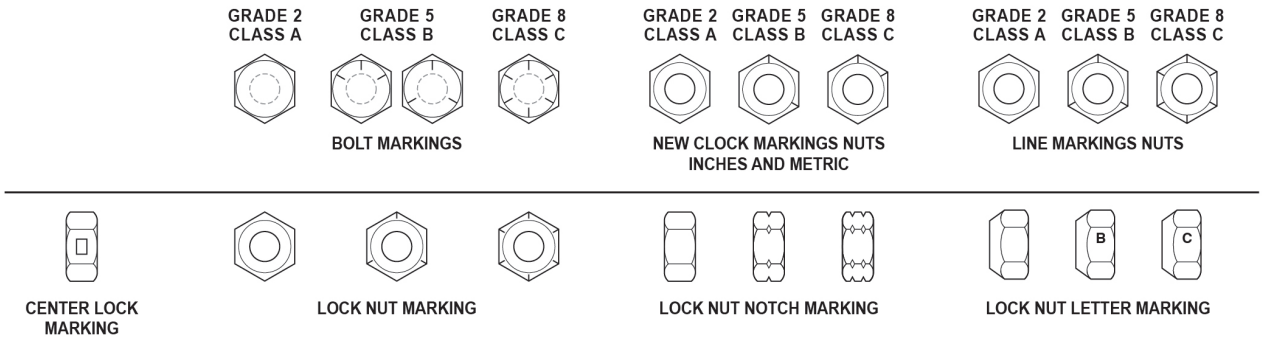

Torque Specifications (Cont'd)

Metric Hardware and Lock Nuts

TORQUE CHARTS

Minimum Hardware Tightening Torques

Normal Assembly Applications
(Metric Hardware and Lock Nuts)

	Class 5,8		Class 8,8		Class 10,9		Lock nuts
Nominal Size	**Unplated or Plated Silver**	**Plated W / ZnCr Gold**	**Unplated or Plated Silver**	**Plated W / ZnCr Gold**	**Unplated or Plated Silver**	**Plated W / ZnCr Gold**	**Class 8 W / CL. 8,8 Bolt**
M4	1.7 N•m (15 in.-lb.)	2.2 N•m (19 in.-lb.)	2.6 N•m (23 in.-lb.)	3.4 N•m (30 in.-lb.)	3.7 N•m (33 in.-lb.)	4.8 N•m (42 in.-lb.)	1.8 N•m (16 in.-lb.)
M6	5.8 N•m (51 in.-lb.)	7.6 N•m (67 in.-lb.)	8.9 N•m (79 in.-lb.)	12 N•m (102 in.-lb.)	13 N•m (115 in.-lb.)	17 N•m (150 in.-lb.)	6.3 N•m (56 in.-lb.)
M8	14 N•m (124 in.-lb.)	18 N•m (159 in.-lb.)	22 N•m (195 in.-lb.)	28 N•m (248 in.-lb.)	31 N•m (274 in.-lb.)	40 N•m (354 in.-lb.)	15 N•m (133 in.-lb.)
M10	28 N•m (21 ft.-lb.)	36 N•m (27 ft.-lb.)	43 N•m (32 ft.-lb.)	56 N•m (41 ft.-lb.)	61 N•m (45 ft.-lb.)	79 N•m (58 ft.-lb.)	30 N•m (22 ft.-lb.)
M12	49 N•m (36 ft.-lb.)	63 N•m (46 ft.-lb.)	75 N•m (55 ft.-lb.)	97 N•m (72 ft.-lb.)	107 N•m (79 ft.-lb.)	138 N•m (102 ft.-lb.)	53 N•m (39 ft.-lb.)
M16	121 N•m (89 ft.-lb.)	158 N•m (117 ft.-lb.)	186 N•m (137 ft.-lb.)	240 N•m (177 ft.-lb.)	266 N•m (196 ft.-lb.)	344 N•m (254 ft.-lb.)	131N•m (97 ft.-lb.)
M20	237 N•m (175 ft.-lb.)	307 N•m (226 ft.-lb.)	375 N•m (277 ft.-lb.)	485 N•m (358 ft.-lb.)	519 N•m (383 ft.-lb.)	671 N•m (495 ft.-lb.)	265 N•m (195 ft.-lb.)
M24	411 N•m (303 ft.-lb.)	531 N•m (392 ft.-lb.)	648 N•m (478 ft.-lb.)	839 N•m (619 ft.-lb.)	897 N•m (662 ft.-lb.)	1160 N•m (855 ft.-lb.)	458 N•m (338 ft.-lb.)

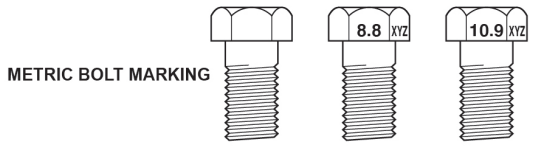

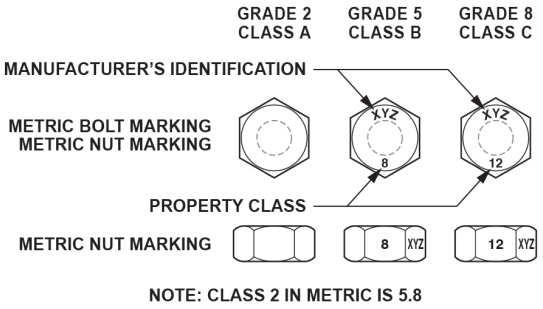

www.loftness.com

Loftness Specialized Equipment, Inc.
650 So. Main Street • PO Box 337 • Hector, MN 55342
Tel: 320.848.6266 • Fax: 320.848.6269 • Toll Free: 1.800.828.7624

Printed in USA
© Loftness 2026